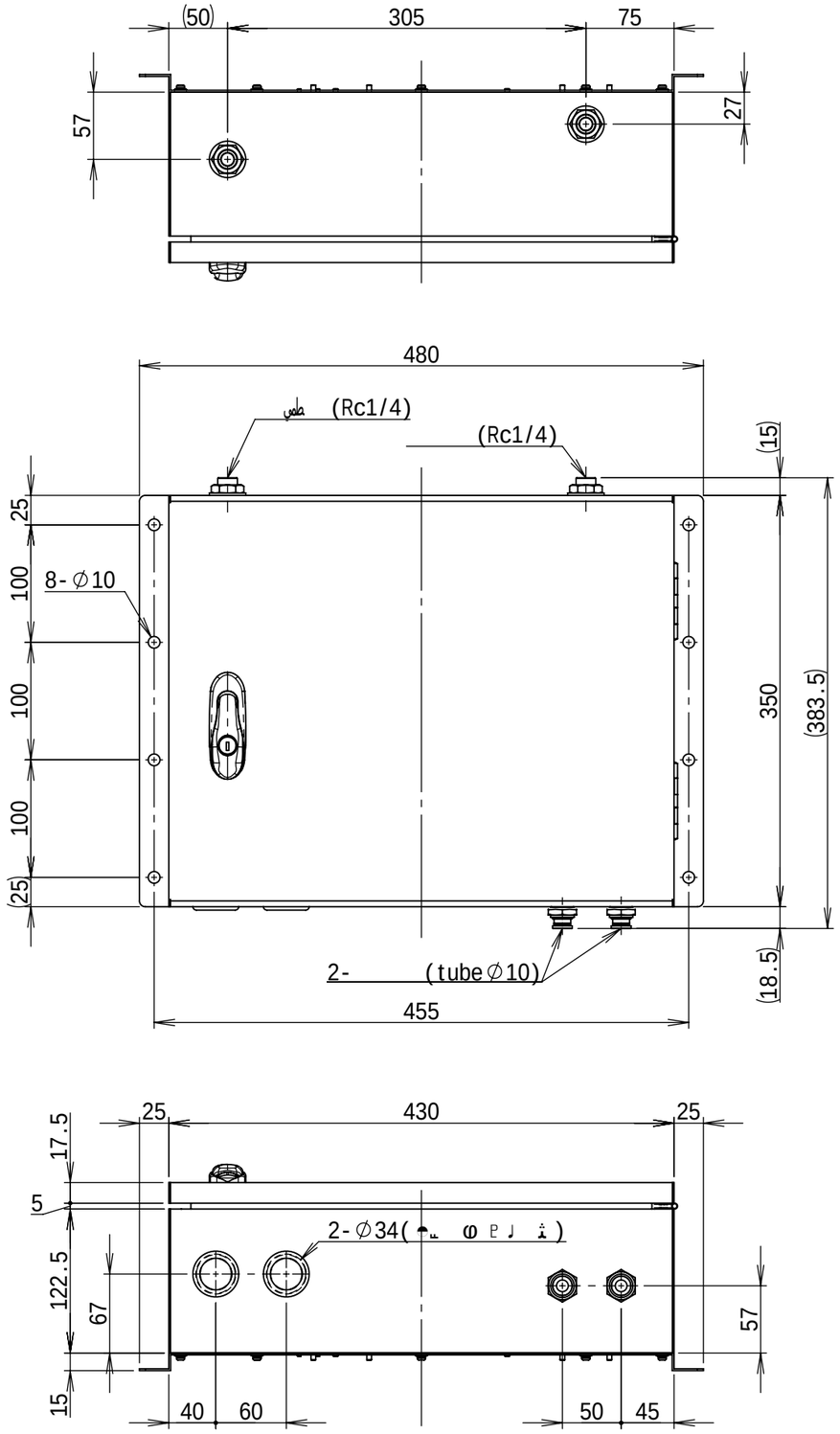

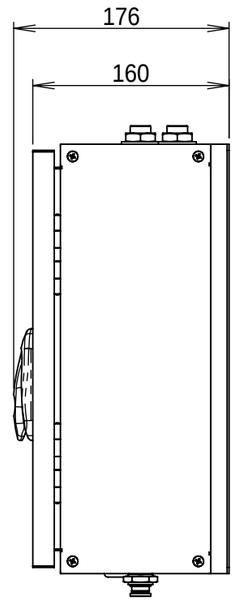

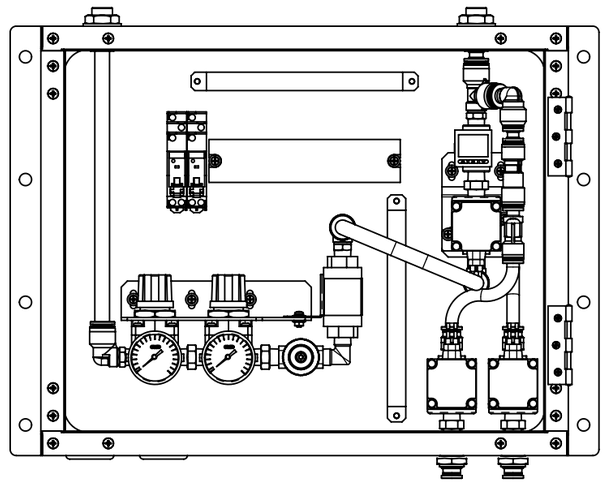

	AE-GSVW011	AE-GSVW011AE
	DC24V	
	33W	
	1.4A	
	11.4kg	
	W480mm × D160mm × H350mm	
	0.6 0.8MPa	
	ON/OFF	
	(2)	

	0		2024.08.22	

			2024.08.22	
			2024.08.22	
			2024.08.22	

AE-GSVW011
AE-GSVW011AE

Panasonic Corp.

A3G1767

A3

1:5

1 / 1