Panasonic

Operating Instructions

Digital Cordless Phone

Model No. **KX-TGH210BX**
KX-TGH210UE

Digital Cordless Answering System

Model No. **KX-TGH220BX**
KX-TGH220UE

Model shown is KX-TGH210.

Before initial use, see "Getting Started" on page 8.

Thank you for purchasing a Panasonic product.
Please read these operating instructions before using the unit and save them for future reference.

Table of Contents

Introduction
Model composition 3
Accessory information 3

Important Information
For your safety 5
Important safety instructions 6
For best performance 6
Other information 7
Specifications 7

Getting Started
Setting up 8
Controls 9
Display icons 11
Turning the power on/off 12
Language setting 12
Date and time 12
Recording your greeting message 12
Other settings 12

Making/Answering Calls
Making calls 15
Answering calls 15
Useful features during a call 16
Intercom 17
Key lock 17
Power back-up operation 18

Phonebook
Phonebook 19
Speed dial 20

Programming
Menu list 22
Alarm 29
Do not disturb mode 29
Nuisance call block 30
Baby monitor 31
Other programming 33
Registering a unit 34

Caller ID Service
Using Caller ID service 36
Caller list 36

Answering System
Answering system 38
Turning the answering system on/off 38
Greeting message 38
Listening to messages 39
Advanced new message alerting features 41
Remote operation 42
Answering system settings 43

Useful Information
Voice mail service 45
Character entry 45
Error messages 47
Troubleshooting 47

Index
Index.....52

TGH21x22xBX_UE_ver021.pdf 2 2014/07/31 15:43:45

Model composition

■ **KX-TGH210 series**

■ **KX-TGH220 series**

Series	Model No.	Base unit	Handset	
		Part No.	Part No.	Quantity
KX-TGH210 series	KX-TGH210	KX-TGH210	KX-TGHA20	1
KX-TGH220 series	KX-TGH220	KX-TGH220	KX-TGHA20	1

Accessory information

Supplied accessories

No.	Accessory item/Part number	Quantity
①	AC adaptor for base unit*1	1
②	Telephone line cord	1
③	Rechargeable batteries*2	2
④	Handset cover*3	1

*1 PNLV226BX: KX-TGH210BX/KX-TGH220BX
PNLV226E: KX-TGH210UE/KX-TGH220UE
*2 See page 4 for replacement battery information.
*3 The handset cover comes attached to the handset.

①
②
③
④

Additional/replacement accessories

Please contact your nearest Panasonic dealer for sales information.

TGH21x22xBX_UE_ver021.pdf 3 2014/07/31 15:43:45

Accessory item	Model number
Rechargeable batteries	HHR-4MY*1
	Battery type: – Nickel metal hydride (Ni-MH) – 2 x AAA (R03) size for each handset
DECT repeater	KX-A405
Key finder	KX-TGA20EX*2

*1 Replacement batteries may have a different capacity from that of the supplied batteries.
*2 By registering the key finder (4 max.) to a Panasonic Digital Cordless Phone and attaching it to an easy-to-lose item in advance, you can locate and find the mislaid item to which the key finder is attached. Please visit our Web site:
http://panasonic.net/pcc/products/telephone/p/tga20/
Please contact Panasonic or authorised sales department for availability of key finder in your area.

Other information

- Design and specifications are subject to change without notice.
- The illustrations in these instructions may vary slightly from the actual product.

Expanding your phone system

Handset (optional)*1	
You can expand your phone system by registering optional handsets (6 max.) to a single base unit. ● Optional handsets may be a different colour from that of the supplied handsets.	

*1 KX-TGHA20BX: KX-TGH210BX/KX-TGH220BX
KX-TGHA20UE: KX-TGH210UE/KX-TGH220UE

TGH21x22xBX_UE_ver021.pdf 4 2014/07/31 15:43:45

For your safety

To prevent severe injury and loss of life/ property, read this section carefully before using the product to ensure proper and safe operation of your product.

⚠WARNING

Power connection

- Use only the power source marked on the product.
- Do not overload power outlets and extension cords. This can result in the risk of fire or electric shock.
- Completely insert the AC adaptor/power plug into the power outlet. Failure to do so may cause electric shock and/or excessive heat resulting in a fire.
- Regularly remove any dust, etc. from the AC adaptor/power plug by pulling it from the power outlet, then wiping with a dry cloth. Accumulated dust may cause an insulation defect from moisture, etc. resulting in a fire.
- Unplug the product from power outlets if it emits smoke, an abnormal smell, or makes an unusual noise. These conditions can cause fire or electric shock. Confirm that smoke has stopped emitting and contact an authorised service centre.
- Unplug from power outlets and never touch the inside of the product if its casing has been broken open.
- Never touch the plug with wet hands. Danger of electric shock exists.

Installation

- To prevent the risk of fire or electrical shock, do not expose the product to rain or any type of moisture.
- Do not place or use this product near automatically controlled devices such as automatic doors and fire alarms. Radio waves emitted from this product may cause such devices to malfunction resulting in an accident.
- Do not allow the AC adaptor or telephone line cord to be excessively pulled, bent or placed under heavy objects.

Operating safeguards

- Unplug the product from power outlets before cleaning. Do not use liquid or aerosol cleaners.
- Do not disassemble the product.
- Do not spill liquids (detergents, cleansers, etc.) onto the telephone line cord plug, or allow it to become wet at all. This may cause a fire. If the telephone line cord plug becomes wet, immediately pull it from the telephone wall jack, and do not use.

Medical

- Consult the manufacturer of any personal medical devices, such as pacemakers or hearing aids, to determine if they are adequately shielded from external RF (radio frequency) energy. (The product operates in the frequency range of 1.88 GHz to 1.90 GHz, and the RF transmission power is 250 mW (max.).)
- Do not use the product in health care facilities if any regulations posted in the area instruct you not to do so. Hospitals or health care facilities may be using equipment that could be sensitive to external RF energy.

⚠CAUTION

Installation and location

- Never install telephone wiring during an electrical storm.
- Never install telephone line jacks in wet locations unless the jack is specifically designed for wet locations.
- Never touch uninsulated telephone wires or terminals unless the telephone line has been disconnected at the network interface.
- Use caution when installing or modifying telephone lines.
- The AC adaptor is used as the main disconnect device. Ensure that the AC outlet is installed near the product and is easily accessible.

TGH21x22xBX_UE_ver021.pdf 5 2014/07/31 15:43:45

- This product is unable to make calls when:
  - the handset batteries need recharging or have failed.
  - there is a power failure.
  - the key lock feature is turned on.

Battery

- We recommend using the batteries noted on page 4. **USE ONLY rechargeable Ni-MH batteries AAA (R03) size.**
- Do not mix old and new batteries.
- Do not open or mutilate the batteries. Released electrolyte from the batteries is corrosive and may cause burns or injury to the eyes or skin. The electrolyte is toxic and may be harmful if swallowed.
- Exercise care when handling the batteries. Do not allow conductive materials such as rings, bracelets, or keys to touch the batteries, otherwise a short circuit may cause the batteries and/or the conductive material to overheat and cause burns.
- Charge the batteries provided with or identified for use with this product only, in accordance with the instructions and limitations specified in this manual.
- Only use a compatible base unit (or charger) to charge the batteries. Do not tamper with the base unit (or charger). Failure to follow these instructions may cause the batteries to swell or explode.

Important safety instructions

When using your product, basic safety precautions should always be followed to reduce the risk of fire, electric shock, and injury to persons, including the following:

1. Do not use this product near water for example, near a bathtub, washbowl, kitchen sink, or laundry tub, in a wet basement or near a swimming pool.
2. Avoid using a telephone (other than a cordless type) during an electrical storm. There may be a remote risk of electric shock from lightning.
3. Do not use the telephone to report a gas leak in the vicinity of the leak.
4. Use only the power cord and batteries indicated in this manual. Do not dispose of batteries in a fire. They may explode. Check with local codes for possible special disposal instructions.

SAVE THESE INSTRUCTIONS

For best performance

Base unit location/avoiding noise

The base unit and other compatible Panasonic units use radio waves to communicate with each other.

- For maximum coverage and noise-free communications, place your base unit:
  - at a convenient, high, and central location with no obstructions between the handset and base unit in an indoor environment.
  - away from electronic appliances such as TVs, radios, personal computers, wireless devices, or other phones.
  - facing away from radio frequency transmitters, such as external antennas of mobile phone cell stations. (Avoid putting the base unit on a bay window or near a window.)
- Coverage and voice quality depends on the local environmental conditions.
- If the reception for a base unit location is not satisfactory, move the base unit to another location for better reception.

Environment

- Keep the product away from electrical noise generating devices, such as fluorescent lamps and motors.
- The product should be kept free from excessive smoke, dust, high temperature, and vibration.
- The product should not be exposed to direct sunlight.
- Do not place heavy objects on top of the product.
- When you leave the product unused for a long period of time, unplug the product from the power outlet.
- The product should be kept away from heat sources such as radiators, cookers, etc. It

TGH21x22xBX_UE_ver021.pdf 6 2014/07/31 15:43:45

should not be placed in rooms where the temperature is less than 0 °C or greater than 40 °C. Damp basements should also be avoided.
- The maximum calling distance may be shortened when the product is used in the following places: Near obstacles such as hills, tunnels, underground, near metal objects such as wire fences, etc.
- Operating the product near electrical appliances may cause interference. Move away from the electrical appliances.

Routine care

- **Wipe the outer surface of the product with a soft moist cloth.**
- Do not use benzine, thinner, or any abrasive powder.

Other information

CAUTION: Risk of explosion if battery is replaced by an incorrect type. Dispose of used batteries according to the instructions.

Notice for product disposal, transfer, or return

- This product can store your private/ confidential information. To protect your privacy/confidentiality, we recommend that you erase information such as phonebook or caller list entries from the memory before you dispose of, transfer, or return the product.

Information on Disposal in other Countries outside the European Union

These symbols are only valid in the European Union. If you wish to discard these items, please contact your local authorities or dealer and ask for the correct method of disposal.

Note for battery removal procedure

Refer to “Battery installation” on page 8.

Specifications

- **Standard:**
  DECT (Digital Enhanced Cordless Telecommunications),
  GAP (Generic Access Profile)
- **Frequency range:**
  1.88 GHz to 1.90 GHz
- **RF transmission power:**
  Approx. 10 mW (average power per channel)
- **Power source:**
  100–240 V AC, 50/60 Hz*1
  220–240 V AC, 50/60 Hz*2
- **Power consumption:**
  Base unit*3:
  Standby: Approx. 0.65 W
  Maximum: Approx. 2.6 W
  Base unit*4:
  Standby: Approx. 0.70 W
  Maximum: Approx. 2.8 W
- **Operating conditions:**
  0 °C–40 °C, 20 %–80 % relative air humidity (dry)

*1 KX-TGH210BX/KX-TGH220BX
*2 KX-TGH210UE/KX-TGH220UE
*3 KX-TGH210 series: page 3
*4 KX-TGH220 series: page 3

Note:

- The range of the handset under maximum conditions is 60 metres indoors and 300 metres outdoors. Please note it will probably be shortened when near concrete barriers, etc.

TGH21x22xBX_UE_ver021.pdf 7 2014/07/31 15:43:45

Setting up

Connections

■ Base unit

① Connect the AC adaptor to the unit by pressing the plug firmly.
② Fasten the cord by hooking it.
③ Connect the AC adaptor to the power outlet.
④ Connect the telephone line cord to the unit, then to the telephone line jack until you hear a click.
⑤ A DSL/ADSL filter (not supplied) is required if you have a DSL/ADSL service.

Note:

- Use only the supplied Panasonic AC adaptor.*1
- Use only the supplied telephone line cord.

*1 PNLV226BX: KX-TGH210BX/ KX-TGH220BX
PNLV226E: KX-TGH210UE/ KX-TGH220UE

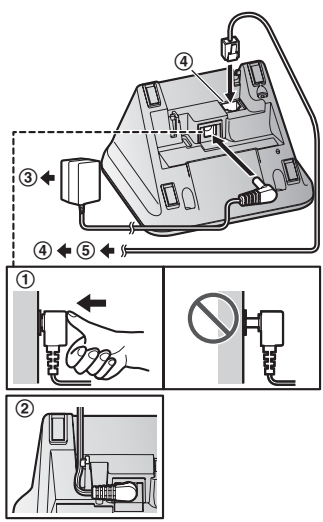

Battery installation

- USE ONLY rechargeable Ni-MH batteries AAA (R03) size (Ⓐ).
- Do NOT use Alkaline/Manganese/Ni-Cd batteries.
- Confirm correct polarities (⊕, ⊖).

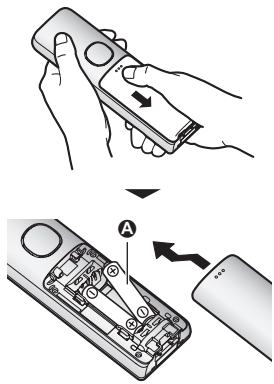

- Follow the directions on the display to set up the unit.

Battery charging

Charge for about 7 hours.

- Confirm **"Charging"** is displayed (Ⓐ).
- When the batteries are fully charged, **"Fully Charged"** is displayed.

TGH21x22xBX_UE_ver021.pdf 8 2014/07/31 15:43:45

Note when setting up

Note for connections

- The AC adaptor must remain connected at all times. (It is normal for the adaptor to feel warm during use.)
- The AC adaptor should be connected to a vertically oriented or floor-mounted AC outlet. Do not connect the AC adaptor to a ceiling-mounted AC outlet, as the weight of the adaptor may cause it to become disconnected.

Note for battery installation

- Use the supplied rechargeable batteries. For replacement, we recommend using the Panasonic rechargeable batteries noted on page 4, 6.

Note for battery charging

- It is normal for the handset to feel warm during charging.
- Clean the charge contacts of the handset, base unit, and charger with a soft and dry cloth once a month. Before cleaning the unit, disconnect from power outlets and any telephone line cords. Clean more often if the unit is exposed to grease, dust, or high humidity.

Battery level

Icon	Battery level
	High
	Medium
	Low
	Needs charging.

Panasonic Ni-MH battery performance (supplied batteries)

Operation	Operating time
In continuous use	14 hours max.
Not in use (standby)	250 hours max.

Note:

- Actual battery performance depends on usage and ambient environment.

Controls

Handset

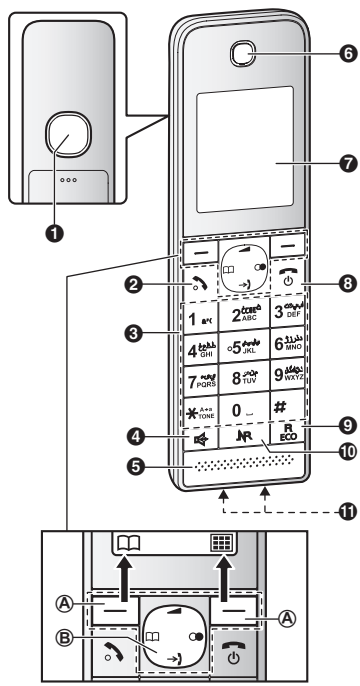

❶ Speaker
❷ 【】(Talk)
❸ Dial keypad (: TONE)
❹ 【】(Speakerphone)
❺ Microphone
❻ Receiver
❼ Display
❽ 【】(Off/Power)

TGH21x22xBX_UE_ver021.pdf 9 2014/07/31 15:43:45

❾ 【R/ECO】
R: Recall/Flash
ECO: Eco mode shortcut key
❿ 【NR】 (Smart Function Key/Noise reduction key)
NR indicator
⓫ Charge contacts

■ Control type
Ⓐ Soft keys
By pressing a soft key, you can select the feature shown directly above it on the display.
Ⓑ Navigator key
Navigator keys functions as follows.

Symbol	Meaning	
【▬】	【▲】	Up
【↔】	【▼】	Down
【📖】	【◄】	Left
【○●】	【►】	Right

– 【▲】, 【▼】, 【◄】, or 【►】: Scroll through various lists and items.
– 【▲】 or 【▼】 (▬): Adjust the receiver or speaker volume while talking.
– 【↔】 (Caller list): View the caller list.
– 【📖】 (Phonebook): View the phonebook entry.
– 【○●】 (Redial): View the redial list.

Base unit

■ KX-TGH210 series: page 3

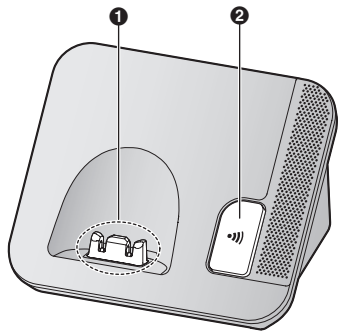

❶ Charge contacts
❷ 【•))】 (Locator)
- You can locate a misplaced handset by pressing 【•))】.

■ KX-TGH220 series: page 3

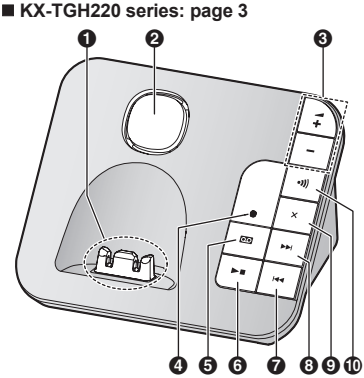

❶ Charge contacts
❷ Speaker
❸ 【+】/【−】 (▬: Volume up/down)
❹ Answer on/off indicator
❺ 【📼】 (Answer on/off)
❻ 【►■】 (Play/Stop)
Message indicator
❼ 【I◄◄】 (Repeat)

TGH21x22xBX_UE_ver021.pdf 10 2014/07/31 15:43:45

❽ 【▶▶|】(Skip)
❾ 【╳】(Erase)
❿ 【•))】(Locator)
- You can locate a misplaced handset by pressing 【•))】.

Display icons

Handset display items

Item	Meaning
	Range status: The more bars visible, the closer the handset is to the base unit.
	Out of base unit range
	Security for phone calls is set to "**Enhanced**". (page 34)
	Paging, intercom mode
	Speakerphone is on. (page 15)
	The line is in use. - When flashing slowly: The call is put on hold. - When flashing rapidly: An incoming call is now being received.
	Missed call*1 (page 36)
ECO	Eco mode is set to "**Eco**". (page 13)
NR	Noise reduction is set. (page 16)
	The key backlight is off. (page 26)
	- When displayed next to the battery icon: Answering system is on.*2 (page 38) - When displayed with a number: New messages have been recorded.*2 (page 39)
	"**Greeting Only**" is selected. Caller messages are not recorded.*2 (page 44)
	Battery level
	Alarm is on. (page 29)
	Privacy mode is on. (page 27)
	Ringer volume is off. (page 25)
	Do not disturb mode is on. (page 29)
	Nuisance call blocked.*1 (page 30)
	New voice mail message received.*3 (page 45)
	Baby monitor is activated. The name/number displayed next to the icon indicates the monitoring unit. (page 31)
Line in use	Someone is using the line.
IN USE	Answering system is being used by another handset or the base unit.*2

*1 Caller ID subscribers only
*2 KX-TGH220 series: page 3
*3 Voice mail subscribers only

Handset soft key icons

Icon	Action
	Returns to the previous screen or outside call.
	Displays the menu.
OK	Accepts the current selection.
	Makes a call. (page 15)
	Temporarily turns off the ringer for incoming calls. (page 15)
	Places a call on hold.
	Opens the phonebook.
	Switches the screen to confirm the detailed information. (page 19, 28)

TGH21x22xBX_UE_ver021.pdf 11 2014/07/31 15:43:46

Icon	Action
	Allows you to edit phone numbers. (page 31)
	Adds new entry. (page 20, 32)
	Displays the phonebook search menu. (page 19)
	Turns the key lock feature off. (page 17)
	Stops alarm. (page 29)
	Snooze button on the alarm. (page 29)
✓	Selects entries or handsets. (page 13, 29)
►	Plays a message.*1
■	Stops recording or playback.*1
	Stores phone numbers. (page 19)
×	Erases the selected item.
	Allows you to make an intercom call. (page 17)
C	Erases a number/character.
	Puts the call on mute.

*1 KX-TGH220 series: page 3

Turning the power on/off

Press 【☎】 for about 2 seconds.

Language setting

Display language

1 【▦】 (right soft key) #1101
2 【▲▼】: Select your desired language. → 【OK】
3 【☎】

Date and time

1 【▦】 (right soft key) #1011
2 Enter the current date, month, and year. → 【OK】
Example: 15 July, 2014
15 07 14
3 Enter the current hour and minute.
Example: 15:30
15 30
4 【OK】 → 【☎】

Note:

- The order in which you enter the date differs according to the selected display language.
Example:
Arabic/Persian: Year/Month/Date
English: Date/Month/Year

Recording your greeting message

Available for:
KX-TGH220 series (page 3)

You can record your own greeting message instead of using a pre-recorded greeting message. See page 38 for details.

1 【▦】 (right soft key) #302
2 【▲▼】: "Yes" → 【OK】
3 Record a greeting message. → 【■】 → 【☎】

Other settings

Smart Function Key (JNR key)

The Smart Function Key (JNR key) is located on the bottom of the handset and informs you with its flashing to allow you to activate the following features by simply pressing this key.

TGH21x22xBX_UE_ver021.pdf 12 2014/07/31 15:43:46

■ **When the NR indicator flashes rapidly, you can:**
- Answer the call (outside call, intercom). (page 15, 17)
- Stop paging.
- Stop the alarm sound. (page 29)

■ **When the NR indicator flashes slowly in standby mode, you can:**
- Listen to new messages.*1 (page 40)
- View the caller list when there are missed calls. (page 36)

To activate these features, their Smart Function Key must be "On". (page 13)

*1 KX-TGH220 series: page 3

Using the Smart Function Key (NR key)

When the NR indicator flashes rapidly/slowly, press 【NR】.

- The above features can be activated depending the situation.
- If you answer a call using the Smart Function Key, the speakerphone is activated.
- Even if the handset is placed on the base unit or charger, the feature can be activated. You can talk or listen to new messages*1 without lifting up the handset. If you want to perform further operations, lift up the handset.
- When the unit has new messages*1 and missed calls, the unit can be operated to play the new messages first and then show the missed calls.

*1 KX-TGH220 series: page 3

Note:

- While key lock is on (page 17), incoming calls can be answered, but the following features are disabled even when the NR indicator flashes slowly.
  - Listen to new messages.*1 (page 40)
  - View the caller list when there are missed calls. (page 36)

*1 KX-TGH220 series: page 3

Setting the Smart Function Key

The Smart Function Key for the following features must be "On".
- **"New Message"**[1] (Default: On)
- **"Missed Call"** (Default: Off)

The settings can be set for each handset.

*1 KX-TGH220 series: page 3

1 【▦】 (right soft key) #2788

2 【▲▼】: Select the desired setting and press 【✓】.
- "✓" is displayed next to the selected features.
- To cancel a selected feature, press 【✓】 again. "✓" disappears.

3 【OK】→【⏻】

Note:

- If the NR indicator flashes when the handset is not placed on the base unit or charger, battery consumption is faster than usual.

Screen saver mode

The backlight goes dark when on a call or turns off completely after 1 minute of inactivity if the handset is not on the base unit or charger.

Activate the handset display again by:
- pressing 【📞】 when on a call.
- pressing 【⏻】 at all other times.

Eco mode setting

You can select the desired eco mode setting by pressing 【R/ECO】.

The following settings are available for eco mode.
- **"Eco"**: Reduces the base unit transmission power by up to 90 % in standby mode. When this setting is selected, ECO is displayed on the handset display instead of Y.
- **"Eco Off"** (default setting): Turns off eco mode. When this setting is selected, ECO is not displayed in the handset display.

TGH21x22xBX_UE_ver021.pdf 13 2014/07/31 15:43:46

Note:

- When there is another cordless phone in use nearby, the base unit transmission power may not be reduced.
- When eco mode is active, the range of the base unit is reduced in standby mode.
- If you set repeater mode to **"On"** (page 35):
  - Eco mode is disabled.
  - **"Eco Mode"** is not displayed in the display menu (page 26).

Dialling mode

If you cannot make calls, change this setting according to your telephone line service. The default setting is **"Tone"**.

"Tone": For tone dial service.

"Pulse": For rotary/pulse dial service.

1 **【▦】** (right soft key) #120

2 **【▲▼】**: Select the desired setting.

3 **【OK】** → **【☎】**

TGH21x22xBX_UE_ver021.pdf 14 2014/07/31 15:43:46

Making calls

1 Lift the handset and dial the phone number.
- To correct a digit, press **【C】**.

2 **【📞】**

3 When you finish talking, press **【⏻】** or place the handset on the base unit or charger.

Using the speakerphone

1 Dial the phone number and press **【🔊】**.

2 When you finish talking, press **【⏻】**.

Note:
- To switch back to the receiver, press **【🔊】**/**【📞】**.

Adjusting the receiver or speaker volume

Press **【▲】** or **【▼】** repeatedly while talking.

Making a call using the redial list

The last 10 phone numbers dialled are stored in the redial list (each 24 digits max.).

1 **【○●】**

2 **【▲▼】**: Select the desired entry.

3 **【📞】**/**【🔊】**
- If **【🔊】** is pressed and the other party's line is engaged, the unit automatically redials multiple times.

Erasing a number in the redial list

1 **【○●】**

2 **【▲▼】**: Select the desired entry. → **【✕】**

3 **【▲▼】**: **"Yes"** → **【OK】** → **【⏻】**

Pause (for PBX/long distance service users)

A pause is sometimes required when making calls using a PBX or long distance service. When storing a calling card access number and/or PIN in the phonebook, a pause is also needed (page 20).
Example: If you need to dial the line access number "0" when making outside calls with a PBX:

1 **【0】** → **【▲】** (Pause)

2 Dial the phone number. → **【📞】**

Note:
- A 3 second pause is inserted each time **【▲】** (Pause) is pressed.

Answering calls

1 Lift the handset and press **【📞】** or **【🔊】** when the unit rings.

2 When you finish talking, press **【⏻】** or place the handset on the base unit or charger.

Any key answer: You can answer the call by pressing any dial key.
Auto talk: You can answer calls simply by lifting the handset (page 27).
Temporary handset ringer off: You can turn the ringer off temporarily by pressing **【🔕】**.

Using the Smart Function Key

When the NR indicator flashes rapidly, press **【NR】**.
- You can answer the call even if the handset is placed on the base unit or charger (page 13).
  You can finish talking by pressing **【⏻】** without lifting up the handset.

Adjusting the ringer volume

Handset

Press **【▲】** or **【▼】** repeatedly to select the desired volume while ringing.

Base unit[*1]

*1 KX-TGH220 series: page 3

Press **【+】** or **【−】** repeatedly to select the desired volume while ringing.

TGH21x22xBX_UE_ver021.pdf 15 2014/07/31 15:43:46

- To turn the ringer off, press and hold **【−】** until the unit beeps.

Useful features during a call

Hold

1 Press **【▥】** during an outside call.
2 **【▲▼】**: **"Hold"** → **【OK】**
3 To release hold, press **【✆】**.

Note:

- After holding for 10 minutes, the call is disconnected.

Mute

1 Press **【⊠】** during a call.
2 To return to the call, press **【⊠】**.

Recall/flash

【R/ECO】 allows you to use the special features of your host PBX such as transferring an extension call, or accessing optional telephone services.

Note:

- To change the recall/flash time, see page 27.

For call waiting or Call Waiting Caller ID service users

To use call waiting or Call Waiting Caller ID, you must first subscribe with your service provider/telephone company.
This feature allows you to receive calls while you are already talking on the phone. If you receive a call while on the phone, you will hear a call waiting tone.
If you subscribe to both Caller ID and Call Waiting with Caller ID services, the 2nd caller's information is displayed after you hear the call waiting tone on the handset.

1 Press **【R/ECO】** to answer the 2nd call.
2 To switch between calls, press **【R/ECO】**.

Note:

- Please contact your service provider/ telephone company for details and availability of this service in your area.

Temporary tone dialling (for rotary/pulse service users)

Press ⊠ (TONE) before entering access numbers which require tone dialling.

Handset noise reduction

This feature allows you to hear the voice of the person you are talking to clearly, by reducing the surrounding noise coming from the other party's telephone.
Press **【NR】** to turn on/off while talking.

Note:

- Depending on the environment where this handset is being used, this feature may not be effective.
- This feature is not available using the speakerphone.

Handset equalizer

This feature clarifies the voice of the person you are talking to, producing a more natural-sounding voice that is easier to hear and understand.

1 Press **【▥】** while talking.
2 **【▲▼】**: **"Equalizer"** → **【OK】**
3 **【▲▼】**: Select the desired setting.
4 Press **【OK】** to exit.

Note:

- Depending on the condition and quality of your telephone line, this feature may emphasise existing line noise. If it becomes difficult to hear, turn this feature off.
- This feature is not available while using the speakerphone.

Call share

You can join an existing outside call.

TGH21x22xBX_UE_ver021.pdf 16 2014/07/31 15:43:46

To join the conversation, press 【📞】 when the other handset is on an outside call.

Note:

- To prevent other users from joining your conversations with outside callers, turn the privacy mode on (page 27).

Transferring calls, conference calls

Outside calls can be transferred or a conference call with an outside party can be made between 2 handsets.

1. During an outside call, press 【▦】.
2. 【▲▼】: "Intercom" → 【OK】
3. 【▲▼】: Select the desired unit. → 【OK】
4. Wait for the paged party to answer.
   - If the paged party does not answer, press 【↩】 to return to the outside call.
5. **To complete the transfer:**
   Press 【⏻】.
   To establish a conference call:
   【▦】 → 【▲▼】: "Conference" → 【OK】
   - To leave the conference, press 【⏻】. The other 2 parties can continue the conversation.
   - To put the outside call on hold: 【▦】 → 【▲▼】: "Hold" → 【OK】
     To resume the conference: 【▦】 → 【▲▼】: "Conference" → 【OK】
   - To cancel the conference: 【▦】 → 【▲▼】: "Stop Conference" → 【OK】
     You can continue the conversation with the outside caller.

Intercom

Intercom calls can be made between handsets.

Note:

- When paging the handset, the paged handset beeps for 1 minute.
- If you receive an outside call while talking on the intercom, you hear 2 tones. To answer the call, press 【⏻】, then press 【📞】.

Making an intercom call

1. 【▦】 (right soft key) → 【📢】
2. 【▲▼】: Select the desired unit. → 【OK】
3. When you finish talking, press 【⏻】.

Answering an intercom call

1. Press 【📞】 to answer the page.
2. When you finish talking, press 【⏻】.

Using the Smart Function Key

Press 【NR】 to answer the page.

Turning auto intercom on/off

This feature allows the handset to answer intercom calls automatically when it is called. You do not need to press 【📞】. When this feature is set to "On", the monitoring handset for the baby monitor feature (page 33) will also answer baby monitor calls automatically. The default setting is "Off".

1. 【▦】 (right soft key) #273
2. 【▲▼】: Select the desired setting. → 【OK】 → 【⏻】

Key lock

The handset can be locked so that no calls or settings can be made. Incoming calls can be answered, but all other functions are disabled while key lock is on.
To turn key lock on, press 【▦】 (right soft key) for about 3 seconds.

- To turn key lock off, press 【🔓】 (right soft key) for about 3 seconds.

Note:

- Calls to emergency numbers cannot be made until key lock is turned off.

TGH21x22xBX_UE_ver021.pdf 17 2014/07/31 15:43:46

Power back-up operation

When a power failure occurs, the charged handset temporarily supplies power to the base unit (power back-up mode). This allows you to make and receive calls using a handset during a power failure. The base unit will not perform any other functions. You can program **"Power Failure"** and the default setting is **"Auto"** (page 27).

Important:

- If a handset is not placed on the base unit when a power failure occurs, **"Base no power Press** ☎**"** is displayed. After pressing **【**☎**】** on the handset, place it on the base unit to start power back-up mode.
- Power back-up mode will not work if the battery level of the power supplying handset is .
- Do not lift the power supplying handset from the base unit during power back-up mode.

Panasonic Ni-MH battery performance (supplied batteries) during power back-up mode

When the batteries are fully charged, operating time of the handset in power back-up mode varies depending on usage.

– Continuous use of the handset in power back-up mode: 2 hours max.
– Continuous use of the handset other than a handset in power back-up mode: 3 hours max.
– Not in use in power back-up mode: 3 hours max.

Making calls during a power failure

■ **When only 1 handset is registered:**

1 Lift the handset and dial the phone number.

2 Within 1 minute, place the handset on the base unit.
- Wait until speakerphone is turned on automatically and the call is made.

3 When the other party answers the call, keep the handset on the base unit and talk using the speakerphone.

4 When you finish talking, press **【**☎**】**.

■ **When 2 or more handsets are registered:**
You should leave one handset on the base unit for supplying power, and use another handset for making calls.

Note:

- The range of the base unit is limited during a power failure. Please use the handset close to the base unit.

TGH21x22xBX_UE_ver021.pdf 18 2014/07/31 15:43:46

Phonebook

You can add 200 names (16 characters max.) and phone numbers (24 digits max.) to the phonebook, and assign each phonebook entry to the desired category.

Important:

- All entries can be shared by any registered handset.

Adding phonebook entries

1 【📖】 → 【▦】
2 【▲▼】: "New Entry" → 【OK】
3 【▲▼】: "(Name)" → 【OK】
4 Enter the party's name. → 【OK】
   - You can change the character entry mode by pressing 【R/ECO】 (page 45).
5 【▲▼】: "(Phone No.)" → 【OK】
6 Enter the party's phone number. → 【OK】
7 【▲▼】: Select the current setting of the category. → 【OK】
8 【▲▼】: Select the desired category. → 【OK】
9 【▲▼】: "<Save>" → 【OK】 → 【☎】

Storing a redial list number to the phonebook

1 【◉】
2 【▲▼】: Select the desired entry. → 【≡▸■】 → 【📁】
3 To store the name, continue from step 3, "Editing entries", page 20.

Storing caller information to the phonebook

1 【➔】
2 【▲▼】: Select the desired entry. → 【▦】
3 【▲▼】: "Save Caller ID" → 【OK】
4 【▲▼】: "Phonebook" → 【OK】
5 To store the name, continue from step 3, "Editing entries", page 20.

Categories

Categories can help you find entries in the phonebook quickly and easily. You can change the names of categories ("Friends", "Family", etc.). By assigning different ringer tones for different categories of callers, you can identify who is calling (category ringer tone), if you have subscribed to Caller ID service.

Changing category names/setting category ringer tone

1 【📖】 → 【▦】
2 【▲▼】: "Category" → 【OK】
3 【▲▼】: Select the desired category. → 【OK】
4 **To change category names**
   【▲▼】: "Category Name" → 【OK】 → Edit the name (10 characters max.). → 【OK】
   To set category ringer tone
   【▲▼】: Select the current setting of the category ringer tone. → 【OK】 → 【▲▼】: Select the desired ringer tone. → 【OK】
5 【☎】

Finding and calling from a phonebook entry

1 【📖】
2 **To scroll through all entries**
   【▲▼】: Select the desired entry.
   To search by first character
   ① Press the dial key (0 to 9, or #) which contains the character you are searching for (page 45).
   ② 【▲▼】: Scroll through the phonebook if necessary.
   To search by category
   ① 【🔍】 → 【▲▼】: "Category" → 【OK】
   ② 【▲▼】: Select the desired category. → 【OK】
   ③ 【▲▼】: Scroll through the phonebook if necessary.

TGH21x22xBX_UE_ver021.pdf 19 2014/07/31 15:43:46

3 【 】

Editing entries

1 Find the desired entry (page 19). → 【 】

2 【▲▼】: “Edit” → 【OK】

3 【▲▼】: Select the desired item you want to change. → 【OK】

4 **To change the name and phone number:**
Edit the name or phone number. → 【OK】
To change the category:
【▲▼】: Select the desired category. → 【OK】

5 【▲▼】: “<Save>” → 【OK】 → 【 】

Erasing entries

Erasing an entry

1 Find the desired entry (page 19). → 【 】

2 【▲▼】: “Erase” → 【OK】

3 【▲▼】: “Yes” → 【OK】 → 【 】

Erasing all entries

1 【 】 → 【 】

2 【▲▼】: “Erase All” → 【OK】

3 【▲▼】: “Yes” → 【OK】

4 【▲▼】: “Yes” → 【OK】 → 【 】

Chain dial

This feature allows you to dial phone numbers in the phonebook while you are on a call. This feature can be used, for example, to dial a calling card access number or bank account PIN that you have stored in the phonebook, without having to dial manually.

1 During an outside call, press 【 】.

2 【▲▼】: “Phonebook” → 【OK】

3 【▲▼】: Select the desired entry.

4 Press 【 】 (right soft key) to dial the number.

Note:

- When storing a calling card access number and your PIN in the phonebook as one phonebook entry, press 【▲】 (Pause) to add pauses after the number and PIN as necessary (page 15).
- If you have rotary/pulse service, you need to press ✱ (TONE) before pressing 【 】 in step 1 to change the dialling mode temporarily to tone. When adding entries to the phonebook, we recommend adding ✱ (TONE) to the beginning of phone numbers you wish to chain dial (page 19).

Speed dial

You can assign 1 phone number to each of the dial keys (1 to 9) on the handset.

Adding phone numbers to speed dial keys

■ **By entering phone numbers:**

1 Press and hold the desired speed dial key (1 to 9). → 【 】

2 【▲▼】: “Manual” → 【OK】

3 Enter the party’s name (16 characters max.). → 【OK】

4 Enter the party’s phone number (24 digits max.). → 【OK】 2 times → 【 】

■ **From the phonebook:**

1 Press and hold the desired speed dial key (1 to 9). → 【 】

2 【▲▼】: “Phonebook” → 【OK】

3 【▲▼】: Select the desired entry.

4 【OK】 2 times → 【 】

Note:

- If you edit a phonebook entry which is assigned to a speed dial key, the edited entry does not transfer to the speed dial key.

TGH21x22xBX_UE_ver021.pdf 20 2014/07/31 15:43:46

Editing an entry

1 Press and hold the desired speed dial key (1 to 9). → **【▦】**

2 **【▲▼】**: “**Edit**” → **【OK】**

3 Edit the name if necessary. → **【OK】**

4 Edit the phone number if necessary. → **【OK】** 2 times → **【☎】**

Erasing an entry

1 Press and hold the desired speed dial key (1 to 9). → **【▦】**

2 **【▲▼】**: “**Erase**” → **【OK】**

3 **【▲▼】**: “**Yes**” → **【OK】** → **【☎】**

Viewing an entry/Making a call

1 Press and hold the desired speed dial key (1 to 9).

2 To make a call, press **【📞】**.

TGH21x22xBX_UE_ver021.pdf 21 2014/07/31 15:43:46

Menu list

To access the features, there are 2 methods.

■ **Scrolling through the display menus**

1. **【▦】** (right soft key)
2. Press **【▼】**, **【▲】**, **【►】**, or **【◄】** to select the desired main menu. → **【OK】**
3. Press **【▼】** or **【▲】** to select the desired item from the next sub-menus. → **【OK】**
4. Press **【▼】** or **【▲】** to select the desired setting. → **【OK】**

■ **Using the direct command code**

1. **【▦】** (right soft key) → Enter the desired code.
   Example: Press **【▦】** (right soft key) **#101**.
2. Select the desired setting. → **【OK】**

Note:

- To exit the operation, press **【⏻】**.
- In the following table, < > indicates the default settings.
- In the following table, ☞ indicates the reference page number.
- Display menu order and sub-menu may vary depending on your model.

Display the menu tree and direct command code table

Main menu: "Caller List"

Operation	Code	☞
Viewing the caller list.	**#213**	36

Main menu: "Answer System"*1

Sub-menu 1	Sub-menu 2	Settings	Code	☞
Message List	–	–	**#329**	40
Play New Message	–	–	**#323**	39
Play All Message	–	–	**#324**	39
Erase All Message*2	–	–	**#325**	40
Greeting	Record Greeting*2	–	**#302**	38
	Play Greeting	–	**#303**	39
	Default*2 (Reset to pre-recorded greeting)	–	**#304**	39

TGH21x22xBX_UE_ver021.pdf 22 2014/07/31 15:43:46

Sub-menu 1	Sub-menu 2	Settings	Code	☞
New Message Alert*2	Outgoing Call – On/Off	On <Off>	#338	41
	Outgoing Call – Notification to	–		
	Outgoing Call – Remote Code	Activate <Inactivate>		
	Base Unit Beep	On <Off>	#339	41
Settings	Number of Rings*2	2-7 Rings <4 Rings> Auto	#211	43
	Recording Time*2	1 Minute <3 Minutes> Greeting Only*3	#305	44
	Remote Code*2	–	#306	42
	Call Screening	<On> Off	#310	43
Answer On*2	–	–	#327	38
Answer Off*2	–	–	#328	38

Main menu: “Nuisance Call Block”*2

Operation	Code	☞
Storing/Viewing blocked call numbers.	#217	30

Main menu: “Intercom”

Operation	Code	☞
Paging the desired unit.	#274	17

Main menu: “Key Finder”*4

Sub-menu 1	Sub-menu 2	Settings	Code	☞
Search	–	–	#655	–
Battery Check	–	–		

Main menu: “Speed Dial”*5, *6

Operation	Code	☞
Viewing the speed dial entry.	#261	20

TGH21x22xBX_UE_ver021.pdf 23 2014/07/31 15:43:46

Main menu: “Display Setup”[*7]

Sub-menu 1	Sub-menu 2	Settings	Code	☞
Wallpaper	–	<Wallpaper1>	#181	–
Clock	–	<On> Off	#198	–
Display Colour	–	<Colour1> Colour2	#182	–
Display Mode[*8]	–	<Multi Items> Single Item	#192	–
Key Backlight	–	<On> Off	#276	–
LCD in charging[*9] (LCD backlight)	–	<On> Off	#191	–
Handset Name	–	–	#104	33
Display Name	–	On <Off>	#105	33

Main menu: ♪ “Ringer Setup”

Sub-menu 1	Sub-menu 2	Settings	Code	☞
Ringer Volume	Handset	Off-6 <6>	#160	–
	Base Unit[*1, *2]	Off-6 <3>	#✱160	–
Ringtone[*10] (Handset)	–	<Ringtone 1>	#161	–
Do Not Disturb Mode	On/Off	On <Off>	#238	29
	Start/End	<23:00/06:00>	#237	30
	Ring Delay	30 sec. <60 sec.> 90 sec. 120 sec. No Ringing	#239	30
	Select Category	Category 1-9	#241	30
First Ring[*2, *11]	–	<On> Off	#173	–

Main menu: “Baby Monitor”

Sub-menu 1	Sub-menu 2	Settings	Code	☞
On/Off	–	On <Off>	#268	31

TGH21x22xBX_UE_ver021.pdf 24 2014/07/31 15:43:46

Sub-menu 1	Sub-menu 2	Settings	Code	☞
Sensitivity Level	–	Low <Middle> High	#269	32

Main menu: “Initial Setup”

Sub-menu 1	Sub-menu 2	Settings	Code	☞
Ringer Setup	Ringer Volume – Handset	Off-6 <6>	#160	–
	Ringer Volume – Base Unit*1, *2	Off-6 <3>	#✱160	–
	Ringtone*10 (Handset)	<Ringtone 1>	#161	–
	Do Not Disturb Mode – On/Off	On <Off>	#238	29
	Do Not Disturb Mode – Start/End	<23:00/06:00>	#237	30
	Do Not Disturb Mode – Ring Delay	30 sec. <60 sec.> 90 sec. 120 sec. No Ringing	#239	30
	Do Not Disturb Mode – Select Category	Category 1-9	#241	30
	First Ring*2, *11	<On> Off	#173	–
Time Settings	Set Date/Time*2	–	#101	12
	Memo Alarm – Alarm1-5	Once Daily Weekly <Off>	#720	29
	Time Adjustment*2, *12	Caller ID <Manual>	#226	–

TGH21x22xBX_UE_ver021.pdf 25 2014/07/31 15:43:46

Sub-menu 1	Sub-menu 2	Settings	Code	☞
Key Finder Setup[*4] – **1:Add New Device** (for **Finder1**)[*13] – **2:Add New Device** (for **Finder2**) – **3:Add New Device** (for **Finder3**) – **4:Add New Device** (for **Finder4**)	**Change Name**[*2]	**Finder1**	**#6561**	–
		Finder2[*14]	**#6562**[*15]	
		Finder3[*14]	**#6563**[*15]	
		Finder4[*14]	**#6564**[*15]	
	Register	–	**#6571**	–
			#6572[*15]	
			#6573[*15]	
			#6574[*15]	
	Cancel Register	–	**#6581**	–
			#6582[*15]	
			#6583[*15]	
			#6584[*15]	
Nuisance Call Block[*2]	**Single Number**	–	**#217**	30
	Range of Numbers	–		
	Withheld	**On** **<Off>**	**#240**	31
Speed Dial	–	–	**#261**	20
Eco Mode[*2, *16]	–	**<Off>** **Eco**	**#725**	13
Security[*2, *16]	–	**<Normal>** **Enhanced**	**#729**	34
Record Greeting[*1, *2]	–	–	**#302**	38
Display Setup	**Wallpaper**	**<Wallpaper1>**	**#181**	–
	Clock	**<On>** **Off**	**#198**	–
	Display Colour	**<Colour1>** **Colour2**	**#182**	–
	Display Mode[*8]	**<Multi Items>** **Single Item**	**#192**	–
	Key Backlight	**<On>** **Off**	**#276**	–
	LCD in charging[*9] (LCD backlight)	**<On>** **Off**	**#191**	–
	Handset Name	–	**#104**	33
	Display Name	**On** **<Off>**	**#105**	33
Smart Function Key	–	–	**#278**	13

TGH21x22xBX_UE_ver021.pdf 26 2014/07/31 15:43:47

Sub-menu 1	Sub-menu 2	Settings	Code	☞
Auto Intercom	–	On <Off>	#273	17
Keytones	–	<On> Off	#165	–
Area Code*2	–	–	#255	33
Call Restrict*2	–	–	#256	33
Auto Talk*17	–	On <Off>	#200	15
Line Setup	Dial Mode*2	Pulse <Tone>	#120	14
	Recall/Flash*2, *18	900 msec. 700 msec. <600 msec.> 400 msec. 300 msec. 250 msec. 200 msec. 160 msec. 110 msec. 100 msec. 90 msec. 80 msec.	#121	16
Privacy Mode*2, *19	–	On <Off>	#194	–
Base Unit PIN*2	–	<0000>	#132	34
Repeater Mode*2	–	On <Off>	#138	35
Register	Register Handset	–	#130	34
	Cancel Register*3	–	#131	34
Power Failure	–	<Auto> Off	#152	18
Language	Display	<English>	#110	12

Main menu: ◕ "Time Settings"

Sub-menu 1	Sub-menu 2	Settings	Code	☞
Set Date/Time*2	–	–	#101	12
Memo Alarm	Alarm1-5	Once Daily Weekly <Off>	#720	29

TGH21x22xBX_UE_ver021.pdf 27 2014/07/31 15:43:47

Sub-menu 1	Sub-menu 2	Settings	Code	☞
Time Adjustment[*2, *12]	–	**Caller ID** **<Manual>**	**#226**	–

*1 KX-TGH220 series: page 3
*2 If you program these settings using one of the handsets, you do not need to program the same item using another handset.
*3 This menu is not displayed when scrolling through the display menus. It is only available in direct command code.
*4 This setting is available when you have the key finder (KX-TGA20EX). Read the installation manual for more information on the key finder.
*5 KX-TGH210 series: page 3
*6 KX-TGH220 series: this menu icon is displayed when the key finder is not registered.
*7 KX-TGH210 series: this menu icon is displayed when the key finder is not registered.
*8 You can select to display either a single item or multiple items on one screen at a time for the handset menu list, recorded message list, phonebook list, caller list, and redial list. When in multiple items display mode, you can switch the screen to confirm the detailed information by:
– pressing 【≡▪】, or
– pressing 【▦】→【▲▼】: "**Detail**" →【OK】
*9 You can set the handset display backlight while on charge.
– "**On**": Backlight is on (dimmed).
– "**Off**": Backlight turns off after 10 seconds of charging.
*10 The preset melodies in this product ("**Ringtone 3**" - "**Ringtone 40**") are used with permission of © 2012 Copyrights Vision Inc.
*11 If you do not want the unit to ring before the caller information is received, set to "**Off**". (Caller ID subscribers only)
You can only remove the first ring if the unit rings 2 times or more by default, which depends on your service provider/telephone company.
*12 This feature allows the unit to automatically adjust the date and time each time caller information including date and time is received.
To turn this feature on, select "**Caller ID**". To turn this feature off, select "**Manual**". (Caller ID subscribers only)
To use this feature, set the date and time first (page 12).
*13 For models with supplied key finders, the display shows "**1:Finder1**".
*14 If you register 2 or more key finders.
*15 If you have 2 or more key finders.
*16 This menu is not displayed when repeater mode is set to "**On**".
*17 If you subscribe to a Caller ID service and want to view the caller's information after lifting up the handset to answer a call, turn off this feature.
*18 The recall/flash time depends on your telephone exchange or host PBX. Contact your PBX supplier if necessary.
*19 To prevent other users from joining your conversations with outside callers, turn this feature on.

TGH21x22xBX_UE_ver021.pdf 28 2014/07/31 15:43:47

Alarm

An alarm sounds at the set time for 1 minute and is repeated 5 times at 5 minute intervals (snooze function). A text memo can also be displayed for the alarm. A total of 5 separate alarm times can be programmed for each handset. You can set one of 3 different alarm options (once, daily, or weekly) for each alarm time.

Important:

- Make sure the unit's date and time setting is correct (page 12).

1 【▦】 (right soft key) #720

2 Select an alarm by pressing 1 to 5. → 【OK】

3 【▲▼】: Select the desired alarm option. → 【OK】

"Off" Turns alarm off. Go to step 9.
"Once" An alarm sounds once at the set time.
"Daily" An alarm sounds daily at the set time. Go to step 5.
"Weekly" Alarm sounds weekly at the set time(s).

4 Proceed with the operation according to your selection in step 3.

- **Once:**
  Enter the desired date and month. → 【OK】
- **Weekly:**
  【▲▼】: Select the desired day of the week and press 【✓】. → 【OK】

5 Set the desired time. → 【OK】

6 Enter a text memo (30 characters max.). → 【OK】

7 【▲▼】: Select the desired alarm tone. → 【OK】

- We recommend selecting a different ringer tone from the one used for outside calls.

8 【▲▼】: Select the desired snooze setting. → 【OK】

9 【OK】 → 【⏻】

Note:

- The order in which you enter the date differs according to the selected display language.
  Example:
  Arabic/Persian: Month/Date
  English: Date/Month
- Press 【🔕】 to stop the alarm completely.
- When the handset is in use, the alarm will not sound until the handset is in standby mode.
- Press any dial key, 【NR】, or 【🕒】 to stop the sound but keep the snooze function activated.
- If you want to make an outside call when the snooze function is activated, please stop the snooze function before making the call.

Do not disturb mode

Do not disturb mode allows you to select a period of time during which the handset will not ring for outside calls. This feature is useful for time periods when you do not want to be disturbed, for example, while sleeping. Do not disturb mode can be set for each handset. Using the phonebook's category feature (page 19), you can also select categories of callers whose calls override do not disturb mode and ring the handset (Caller ID subscribers only).

Important:

- Make sure the unit's date and time setting is correct (page 12).
- We recommend turning the base unit ringer off (page 25) in addition to turning do not disturb mode on. (KX-TGH220 series: page 3)
- If you have set the alarm, the alarm sounds even if do not disturb mode is turned on.

Turning do not disturb mode on/off

1 【▦】 (right soft key) #238

TGH21x22xBX_UE_ver021.pdf 29 2014/07/31 15:43:47

2 【▲▼】: Select the desired setting. → 【OK】
- If you select "Off", press 【☎】 to exit.

3 Enter the desired hour and minute you wish to start this feature. → 【OK】

4 Enter the desired hour and minute you wish to end this feature. → 【OK】 → 【☎】

Changing the start and end time

1 【▦】 (right soft key) #237

2 Continue from step 3, "Turning do not disturb mode on/off", page 29.

Setting the ring delay

This setting allows the handset to ring during do not disturb mode if the caller waits long enough. After the selected amount of time passes, the handset rings. If you select "No Ringing", the handset never rings during do not disturb mode.

1 【▦】 (right soft key) #239

2 【▲▼】: Select the desired setting. → 【OK】 → 【☎】

Note:

- When the answering system answers the call, this feature does not work. (KX-TGH220 series: page 3)

Selecting categories to bypass do not disturb mode

1 【▦】 (right soft key) #241

2 Select your desired categories by pressing 1 to 9.
- "✓" is displayed next to the selected category numbers.
- To cancel a selected category, press the same dial key again. "✓" disappears.

3 【OK】 → 【☎】

Nuisance call block

This feature rejects calls from unwanted callers (Caller ID subscribers only). The following items are available when storing phone numbers in the call block list (50 max.).
– "Single Number": The unit can reject calls from specific phone numbers.
– "Range of Numbers": The unit can reject calls that begin with a number stored in the call block list, such as a toll-free phone number prefix or certain area codes.

You can also set the unit to reject calls that do not have a phone number.
When a call is received, the unit does not ring while the caller is being identified. If the caller's phone number matches an entry in the call block list, the unit emits no sound to the caller, and disconnects the call.

Important:

- Rejected calls are logged in the caller list.

Storing unwanted callers

Storing a single phone number

Important:

- You must include the area code when storing phone numbers in the call block list.

■ **From the caller list:**

1 【→】

2 【▲▼】: Select the entry to be blocked. → 【▦】

3 【▲▼】: "Save Caller ID" → 【OK】

4 【▲▼】: "Nuisance Call Block" → 【OK】

5 【▲▼】: "Yes" → 【OK】 → 【☎】

■ **By entering phone numbers:**

1 【▦】 (right soft key) #217

2 【▲▼】: "Single Number" → 【OK】

3 【▦】 → 【▲▼】: "Add" → 【OK】

4 Enter the phone number (24 digits max.).
- To erase a digit, press 【C】.

5 【OK】 → 【☎】

TGH21x22xBX_UE_ver021.pdf 30 2014/07/31 15:43:47

Storing a range of numbers

1 【▦】 (right soft key) #217
2 【▲▼】: "Range of Numbers" → 【OK】
3 【▦】 → 【▲▼】: "Add" → 【OK】
4 Enter the desired number (2-8 digits).
- To erase a digit, press 【C】.

5 【OK】 → 【☎】

Blocking incoming calls that have no phone number

You can reject calls when no phone number is provided, such as private callers.

1 【▦】 (right soft key) #240
2 【▲▼】: Select the desired setting. → 【OK】
3 【☎】

Viewing/editing/erasing call block numbers

1 【▦】 (right soft key) #217
2 【▲▼】: "Single Number" or "Range of Numbers" → 【OK】
3 【▲▼】: Select the desired entry.
- To exit, press 【☎】.

4 **To edit a number:**
【📖】 → Edit the number. → 【OK】 → 【☎】
To erase a number:
【✕】 → 【▲▼】: "Yes" → 【OK】 → 【☎】

Note:

- When editing, press the desired dial key to add, 【C】 to erase.

Erasing all call block numbers

1 【▦】 (right soft key) #217
2 【▲▼】: "Single Number" or "Range of Numbers" → 【OK】
3 【▦】 → 【▲▼】: "Erase All" → 【OK】
4 【▲▼】: "Yes" → 【OK】
5 【▲▼】: "Yes" → 【OK】 → 【☎】

Baby monitor

This feature allows you to listen in on a room where another handset is located, allowing you to easily monitor from different areas of the house or place. The monitored handset (placed in a baby's room, for example) will automatically call the monitoring handset or the phone number stored when it detects sound.

Important:

- You should perform a test run of the baby monitor procedure to ensure that the baby monitor feature is set correctly. For example, test its sensitivity. Check the connection if you are diverting the baby monitor to an outside line.
- This feature should not be used as a substitute for a medical or caregiver's supervision. It is the caregiver's responsibility to stay close enough to handle any eventuality.

Note:

- If the unit is connected to a PBX system, you cannot set the baby monitor.
- During the monitoring mode, battery consumption is faster than usual. We recommend leaving the monitored handset on the base unit or charger.
- The monitored handset never rings during the monitoring mode.
KX-TGH220 series (page 3): If the monitored handset is on the base unit, the base unit ringer sounds. Turn off the base unit ringer volume to not sound the ringer (page 25).

Setting the baby monitor

Perform the setting operation with the handset to be monitored (for example, the handset placed in a baby's room).

To monitor with a handset

The internal baby monitor feature is only available between handsets.

TGH21x22xBX_UE_ver021.pdf 31 2014/07/31 15:43:47

1 【▦】 (right soft key) #268
2 【▲▼】: "On" → 【OK】
3 【▲▼】: Select the desired handset number to monitor with. → 【OK】
   - "Baby Monitor" will be displayed.
   - The registered handset name/number is displayed.

Note:

- When this feature is on, another handset can hear the monitored handset by making an intercom call.

To monitor from an outside line

■ **From the phonebook:**

1 【▦】 (right soft key) #268
2 【▲▼】: "On" → 【OK】
3 【▲▼】: Select "External" to monitor from an outside line. → 【📖】 → 【📖←】
4 【▲▼】: "Phonebook" → 【OK】
5 【▲▼】: Select the phonebook entry. → 【OK】 2 times
   - "Baby Monitor" will be displayed.

Note:

- If you edit a phonebook entry which is assigned for monitoring, the edited entry does not transfer to the monitor.

■ **By entering phone numbers:**

1 【▦】 (right soft key) #268
2 【▲▼】: "On" → 【OK】
3 【▲▼】: Select "External" to monitor from an outside line. → 【📖】 → 【📖←】
4 【▲▼】: "Manual" → 【OK】
5 Enter the desired name. → 【OK】
6 Enter the desired number. → 【OK】 2 times
   - "Baby Monitor" will be displayed.

Note:

- The registered name/number is displayed.

Turning off the baby monitor

The monitored handset cannot be used while baby monitor is set to "On".

1 Press 【▦】 on the handset being monitored.
2 【▲▼】: "On/Off" → 【OK】
3 【▲▼】: "Off" → 【OK】 → 【☎】

Editing an outside monitoring number

1 Press 【▦】 on the handset being monitored.
2 【▲▼】: "On/Off" → 【OK】
3 【▲▼】: "On" → 【OK】
4 【▲▼】: Select the outside line. → 【📖】
5 【▦】 → 【▲▼】: "Edit" → 【OK】
6 Edit the name if necessary. → 【OK】
7 Edit the phone number if necessary. → 【OK】 2 times

Erasing an outside monitoring number

1 Press 【▦】 on the handset being monitored.
2 【▲▼】: "On/Off" → 【OK】
3 【▲▼】: "On" → 【OK】
4 【▲▼】: Select the outside line. → 【📖】
5 【▦】 → 【▲▼】: "Erase" → 【OK】
6 【▲▼】: "Yes" → 【OK】 → 【☎】

Baby monitor sensitivity

You can adjust the sensitivity of the baby monitor. Increase or decrease the sensitivity to adjust the sound level needed to trigger the baby monitor feature.

- This feature cannot be set during a monitoring call.

1 Press 【▦】 on the handset being monitored.
2 【▲▼】: "Sensitivity Level" → 【OK】
3 【▲▼】: Select the desired setting. → 【OK】 → 【☎】

TGH21x22xBX_UE_ver021.pdf 32 2014/07/31 15:43:47

Answering the baby monitor

■ **When monitoring with a handset:**
Press 【 】 to answer calls.
If you want to respond from the monitoring handset, press 【⊠】.
- The monitoring handset will answer calls automatically when the auto intercom feature is set to **"On"** (page 17).

Note:
- If you receive an outside call when communicating with the monitored handset, you hear 2 tones. To answer the call, press 【 】, then press 【 】.

■ **When monitoring from an outside line:**
To answer a call, follow the operation for your phone.
If you want to respond from the monitoring handset, press #1 using tone dialling.
You can turn off the baby monitor feature by pressing #0.

Note:
- 2 minutes after the monitored handset starts a call, communication between the monitored handset and monitoring phone line is turned off automatically.

Other programming

Changing the handset name

The default handset name is **"Handset 1"** to **"Handset 6"**. You can customise the name of each handset ("Bob", "Kitchen", etc.). This is useful when you make intercom calls between handsets. To display the handset name in standby mode, turn on the handset name display feature (page 33).

1 【▦】 (right soft key) #104
2 Enter the desired name (10 characters max.).
3 【OK】→【 】

Storing an area code to be deleted automatically

In some situations, phone numbers stored automatically in the caller list (page 36) will include area codes. If you do not want to dial the area code when making calls from the caller list, you can store the area code which you want the unit to delete automatically.
Example: You have stored the area code "123". If you make a call from the caller list to the phone number "123-456-7890", the unit dials "456-7890".

1 【▦】 (right soft key) #255
2 Enter an area code (5 digits max.). → 【OK】→【 】

Displaying the handset name

You can select whether or not the handset name is displayed in standby mode. The default setting is **"Off"**.

1 【▦】 (right soft key) #105
2 【▲▼】: Select the desired setting. →【OK】→【 】

Call restriction

You can restrict selected handsets from dialling certain numbers. You can assign up to 6 phone numbers to be restricted, and select which handsets are to be restricted. Storing area codes here prevents the restricted handsets from dialling any phone number in that area code.

1 【▦】 (right soft key) #256
2 Enter the base unit PIN (default: **"0000"**).
- If you forget your PIN, contact an authorised service centre.

3 Select the handsets to be restricted by pressing 1 to 6.
- All handsets registered to the base unit are displayed.
- "✓" is displayed next to the selected handset numbers.
- To cancel a selected handset, press the same dial key again. "✓" disappears.

TGH21x22xBX_UE_ver021.pdf 33 2014/07/31 15:43:47

4 【OK】

5 Select a memory location by pressing 1 to 6. → 【OK】

6 Enter the phone number or area code to be restricted (8 digits max.). → 【OK】 → 【☎】

Enhancing security for phone calls

You can increase the security of phone conversations by setting this feature to **"Enhanced"**. When **"Enhanced"** is selected, 🔒 is displayed. The default setting is **"Normal"**.

1 【▦】 (right soft key) #729

2 【▲▼】: Selected the desired setting. → 【OK】

3 【☎】

Note:

- If you set repeater mode to **"On"** (page 35):
  - Security is set to **"Normal"** and 🔒 is displayed.
  - **"Security"** is not displayed in the display menu (page 26).
- When enhanced security is enabled, sound may cut in and out during conversations.

Changing the base unit PIN

Important:

- If you change the PIN (Personal Identification Number), please make note of your new PIN. The unit will not reveal the PIN to you. If you forget your PIN, contact an authorised service centre.

1 【▦】 (right soft key) #132

2 Enter the current 4-digit base unit PIN (default: **"0000"**).

3 Enter the new 4-digit base unit PIN. → 【OK】

4 【▲▼】: **"Yes"** → 【OK】 → 【☎】

Registering a unit

Operating additional units

Additional handsets

Up to 6 handsets can be registered to the base unit.

Important:

- The additional handset model recommended for use with this unit is noted on page 4. If another handset model is used, certain operations may not be available.

Registering a handset to the base unit

The supplied handset and base unit are pre-registered. If for some reason the handset is not registered to the base unit (for example, 🔒 is displayed even when the handset is near the base unit), re-register the handset.

1 **Handset:**
【▦】 (right soft key) #130

2 **Base unit:**
Press and hold 【📶】 for about 5 seconds.
- If all registered handsets start ringing, press 【📶】 again to stop, then repeat this step.

3 **Handset:**
【OK】 → Wait until **"Base PIN"** is displayed. → Enter the base unit PIN (default: **"0000"**). → 【OK】
- If you forget your PIN, contact an authorised service centre.

Deregistering a handset

A handset can cancel its own registration to the base unit, or other handsets registered to the same base unit. This allows the handset to end its wireless connection with the system.

1 【▦】 (right soft key) #131
- All handsets registered to the base unit are displayed.

TGH21x22xBX_UE_ver021.pdf 34 2014/07/31 15:43:47

2 **【▲▼】**: Select the handset you want to cancel. → **【OK】**

3 **【▲▼】**: “**Yes**” → **【OK】** → **【☎】**

Increasing the range of the base unit

You can increase the signal range of the base unit by using a DECT repeater. Please use only the Panasonic DECT repeater noted on page 4. Contact your Panasonic dealer for details.

Important:

- Before registering the repeater to this base unit, you must turn the repeater mode on.
- Do not use more than one repeater at a time.

Setting the repeater mode

1 **【▦】** (right soft key) #138

2 **【▲▼】**: Select the desired setting. → **【OK】** → **【☎】**

Registering the DECT repeater (KX-A405) to the base unit

Note:

- Please use a repeater that has not yet been registered to another unit. If the repeater is registered to another unit, deregister it first, referring to the Installation Guide for the DECT repeater.

1 **Base unit:**
Press and hold **【•))】** for about 5 seconds.

2 **DECT repeater:**
Connect the AC adaptor, then wait until the ⓘ indicator and Y indicator light green.

3 **Base unit:**
To exit the registration mode, press **【•))】**.

TGH21x22xBX_UE_ver021.pdf 35 2014/07/31 15:43:47

Using Caller ID service

Important:

- This unit is Caller ID compatible. To use Caller ID features, you must subscribe to a Caller ID service. Contact your service provider/telephone company for details.

Caller ID features

When an outside call is being received, the caller information is displayed.
Caller information for the last 50 callers is logged in the caller list from the most recent call to the oldest.

- If the unit cannot receive caller information, the following is displayed:
  - **"Out of Area"**: The caller dials from an area which does not provide a Caller ID service.
  - **"Private Caller"**: The caller requests not to send caller information.
- If the unit is connected to a PBX system, caller information may not be properly received. Contact your PBX supplier.

Missed calls

If a call is not answered, the unit treats it as a missed call and 📞 is displayed. This lets you know if you should view the caller list to see who called while you were away.
Even if only one missed call in the caller list is viewed (page 36), 📞 disappears from the display. When you receive another new call, 📞 is displayed again.

Note:

- Even when there are unviewed missed calls, 📞 disappears from the standby display if the following operation is performed by one of the registered handsets:
  - Being replaced on the base unit or charger.
  - Pressing 【⏻】.

Phonebook name display

When caller information is received and it matches a phone number stored in the phonebook, the stored name in the phonebook is displayed and logged in the caller list.

Caller list

Important:

- Make sure the unit's date and time setting is correct (page 12).

Viewing the caller list and calling back

1 【📞】
2 Press 【▼】 to search from the most recent call, or press 【▲】 to search from the oldest call.
3 To call back, press 【📞】.
To exit, press 【⏻】.

Note:

- In step 2, to see the detailed information when in multiple display mode:
  【▦】 → 【▲▼】: **"Detail"** → 【OK】
- If the entry has already been viewed or answered, "✓" is displayed.
- If you do not want to dial the area code when making calls from the caller list, you can store the area code which you want the unit to delete automatically (page 33).

Using the Smart Function Key

When 📞 is displayed and the JNR indicator flashes slowly, there are missed calls.
Press 【JNR】 in step 1 on "Viewing the caller list and calling back", page 36.

- **"Missed Call"** must be set to "On" in "Setting the Smart Function Key", page 13.
- If the handset is placed on the base unit or charger, you need to lift up the handset to view the caller list after pressing 【JNR】.
- When the unit has new messages*1 and missed calls, the unit can be operated to play the new messages first and then show the missed calls.

*1 KX-TGH220 series: page 3

TGH21x22xBX_UE_ver021.pdf 36 2014/07/31 15:43:47

Editing a caller's phone number

1 **[→)]**
2 **[▲▼]**: Select the desired entry. → **[▦]**
3 **[▲▼]**: "**Edit & Call**" → **[OK]**
4 Edit the number.
5 **[✆]**

Erasing selected caller information

1 **[→)]**
2 **[▲▼]**: Select the desired entry.
3 **[✕]** → **[▲▼]**: "**Yes**" → **[OK]** → **[⏻]**

Erasing all caller information

1 **[→)]**
2 **[✕]** → **[▲▼]**: "**Yes**" → **[OK]** → **[⏻]**

TGH21x22xBX_UE_ver021.pdf 37 2014/07/31 15:43:47

Answering system

Available for:
KX-TGH220 series (page 3)

The answering system can answer and record calls for you when you are unavailable to answer the phone.
You can also set the unit to play a greeting message but not to record caller messages by selecting **"Greeting Only"** as the recording time setting (page 44).

Important:

- Make sure the unit's date and time setting is correct (page 12).
- Answering system announcements are in English only.

Memory capacity (including your greeting message)

The total recording capacity is about 40 minutes. A maximum of 64 messages can be recorded.

Note:

- When message memory becomes full:
  - **"Messages Full"** is shown on the handset display.
  - The answer on/off indicator on the base unit flashes rapidly if the answering system is turned on.
  - [✉] and the total number of new messages are not displayed on the handset even if the answering system is turned on.
  - If you use the pre-recorded greeting message, the unit automatically switches to another pre-recorded greeting message asking callers to call again later.
  - If you recorded your own greeting message, the same message is still announced to callers even though their messages are not recorded.

Turning the answering system on/off

The answering system is preset to on.

Base unit

Press **[📼]** to turn on/off the answering system.

Handset

1 **To turn on:**
[▦] (right soft key) #3271
To turn off:
[▦] (right soft key) #3280

2 **[☎]**

Note for base unit and handset:

- When the answering system is turned on:
  - the answer on/off indicator on the base unit lights up.
  - [✉] is displayed on the handset.

Greeting message

When the unit answers a call, a greeting message is played to callers.
You can use either:
– your own greeting message
– a pre-recorded greeting message

Recording your greeting message

1 **[▦]** (right soft key) #3020
2 **[▲▼]**: **"Yes"** → **[OK]**
3 After a beep sounds, hold the handset about 20 cm away and speak clearly into the microphone (2 minutes max.).
4 Press **[■]** to stop recording. → **[☎]**

Using a pre-recorded greeting message

The unit provides 2 pre-recorded greeting messages:
– If you erase or do not record your own greeting message, the unit plays a

TGH21x22xBX_UE_ver021.pdf 38 2014/07/31 15:43:47

pre-recorded greeting asking callers to leave a message.
– If the message recording time (page 44) is set to "**Greeting Only**", callers' messages are not recorded and the unit plays a different pre-recorded greeting message asking callers to call again.

Resetting to a pre-recorded greeting message

If you want to use a pre-recorded greeting message once you record your own greeting message, you need to erase your own greeting message.

1 【▦】 (right soft key) #304
2 【OK】→【⏻】

Playing back the greeting message

1 【▦】 (right soft key) #303
2 【⏻】

Listening to messages

Using the base unit

When new messages have been recorded, 【▶■】 on the base unit flashes.
Press 【▶■】.
- During playback, 【▶■】 on the base unit lights.
- If new messages have been recorded, the base unit plays back new messages.
- If there are no new messages, the base unit plays back all messages.

Operating the answering system during playback

Key	Operation
【+】 or 【−】	Adjust the speaker volume
【⏮】	Repeat message*1
【⏭】	Skip message
【▶■】	Stop playback
【✕】	Erase currently playing message

*1 If pressed within the first 5 seconds of a message, the previous message is played.

Rewinding the message

Press and hold 【⏮】 until the unit plays the desired part of the message.
- During rewinding, the base unit makes a continuous beeping sound. Rewinding speed may vary depending on the recorded message.
- At the beginning of the message, the unit plays the message at normal speed.

Fast-forwarding the message

Press and hold 【⏭】 until the unit plays the desired part of the message.
- During fast-forwarding, the base unit makes a continuous beeping sound.
  Fast-forwarding speed may vary depending on the recorded message.
- Even if you press and hold 【⏭】 when the end of this message is played, the next message is played at normal speed.

Erasing all messages

Press 【✕】 2 times while the unit is not in use.

Using the handset

When new messages have been recorded, ✉ is displayed on the handset with the total number of new messages.

1 **To listen to new messages:**
【▦】 (right soft key) #323
To listen to all messages:
【▦】 (right soft key) #324
2 When finished, press 【⏻】.

Note:
- To switch to the receiver, press 【📞】.

TGH21x22xBX_UE_ver021.pdf 39 2014/07/31 15:43:47

Using the Smart Function Key

When [voicemail] is displayed and the NR indicator flashes slowly, there are new messages. Press 【NR】 in step 1 on "Using the handset", page 39.

- **"New Message"** must be set to "On" in "Setting the Smart Function Key", page 13.

Listening to messages from the message list

You can select the item to play back.

1 【▥】 (right soft key) #3291

2 【▲▼】: Select the desired item from the message list. → 【►】
- You can erase the selected message as follows:
  【▥】 → 【▲▼】: **"Erase"** → 【OK】 → 【▲▼】: **"Yes"** → 【OK】

3 When finished, press 【⏻】.

Note:

- If the item has already been heard, "✓" is displayed.
- **"Message"** is displayed in the message list if the unit cannot receive caller information.

Operating the answering system

【▥】 (right soft key) → [voicemail] → 【OK】

Key	Operation
【▲】 or 【▼】	Adjust the receiver or speaker volume (during playback)
1 or 【◄】	Repeat message (during playback)*1
2 or 【►】	Skip message (during playback)*2
3	Enter the **"Settings"** menu
4	Play new messages
5	Play all messages
6	Play greeting message
7 6	Record greeting message
8	Turn answering system on
【▥】	Pause message*3
9 or 【■】	Stop recording Stop playback
0	Turn answering system off
✱ 4*4	Erase currently playing message
✱ 5	Erase all messages
✱ 6	Reset to a pre-recorded greeting message

*1 If pressed within the first 5 seconds of a message, the previous message is played except when playing back from the message list.

*2 When you play a message from the message list, the unit stops message playback and the display goes back to the message list.

*3 To resume playback:
【▲▼】: **"Play"** → 【OK】

*4 You can also erase as follows:
【▥】 → 【▲▼】: **"Erase"** → 【OK】 → 【▲▼】: **"Yes"** → 【OK】

Calling back (Caller ID subscribers only)

1 Press 【▥】 during playback.

2 【▲▼】: **"Call Back"** → 【OK】

■ **Editing the number before calling back**

1 Press 【▥】 during playback.

2 【▲▼】: **"Edit & Call"** → 【OK】

3 Edit the number. → 【📞】

Erasing all messages

1 【▥】 (right soft key) #3251

2 【▲▼】: **"Yes"** → 【OK】 → 【⏻】

TGH21x22xBX_UE_ver021.pdf 40 2014/07/31 15:43:48

Advanced new message alerting features

Audible message alert

This feature allows the base unit to beep to inform you of a new message arrival when new messages are recorded. The base unit beeps 2 times every minute until you listen to the messages, if the "**Base Unit Beep**" setting is turned on. The default setting is "**Off**".

1 【▦】 (right soft key) #339
2 【▲▼】: Select the desired setting. → 【OK】 → 【⏻】

New message alert by a call

This feature allows you to receive a notification by phone when new messages are recorded. The base unit calls a phone number you specify. You can then operate the answering system remotely to listen to the new message.
To use this feature, you must:
– store a phone number to which the unit makes the call to.
– turn on the new message alert setting.
After you answer the new message alert call, you can listen to messages from that call (page 42).

Important:

- A new message alert is stopped 1 minute after the unit starts to call. The unit will not retry the call even if the call is not answered.

Storing a phone number to which the unit makes an alert call

■ **From the phonebook:**

1 【▦】 (right soft key) #338
2 【▲▼】: "**Notification to**" → 【OK】 → 【📖⇦】
3 【▲▼】: "**Phonebook**" → 【OK】
4 【▲▼】: Select the desired phonebook entry. → 【OK】 2 times → 【⏻】

■ **By entering a phone number:**

1 【▦】 (right soft key) #338
2 【▲▼】: "**Notification to**" → 【OK】 → 【📖⇦】
3 【▲▼】: "**Manual**" → 【OK】
4 Enter the desired name (16 characters max.). → 【OK】
5 Enter the desired number (24 digits max.). → 【OK】 2 times → 【⏻】

Turning on/off the new message alert setting

1 【▦】 (right soft key) #338
2 【▲▼】: "**On/Off**" → 【OK】
3 【▲▼】: Select the desired setting. → 【OK】 → 【⏻】

Editing the set phone number

1 【▦】 (right soft key) #338
2 【▲▼】: "**Notification to**" → 【OK】
3 【▦】 → 【▲▼】: "**Edit**" → 【OK】
4 Edit the name if necessary (16 characters max.). → 【OK】
5 Edit the phone number if necessary (24 digits max.). → 【OK】 2 times → 【⏻】

Erasing the set phone number

1 【▦】 (right soft key) #338
2 【▲▼】: "**Notification to**" → 【OK】
3 【▦】 → 【▲▼】: "**Erase**" → 【OK】
4 【▲▼】: "**Yes**" → 【OK】 → 【⏻】
- The new message alert setting is turned off.

Activating/inactivating the remote access code to play messages

If you activate this feature, you must enter the remote access code (page 42) to play the new message from the new message alert call. This is so that unauthorised parties

TGH21x22xBX_UE_ver021.pdf 41 2014/07/31 15:43:48

cannot listen to your messages. The default setting is **"Inactivate"**.
– **"Inactivate"**: You can listen to the message by pressing 4 to play new messages (without entering the remote access code).
– **"Activate"**: You must enter your remote access code and then press 4 to play new message.

1 **[▥]** (right soft key) #338
2 **[▲▼]**: **"Remote Code"** → **[OK]**
3 **[▲▼]**: Select the desired setting. → **[OK]** → **[☎]**

Listening to messages

After you answer the new message alert, you can listen to the messages as follows.

■ **When the remote access code is set to "Inactivate":**
Press 4 to play the new message during the announcement.

■ **When the remote access code is set to "Activate":**

1 Enter the remote access code (page 42) during the announcement.
2 Press 4 to play the new message.

Note:

- Within 10 seconds after listening to new messages, you can press #9 during the call to turn off the new message alert by a call feature.
- Even if the unit makes a new message alert call, the handset redial list does not show the record.

Remote operation

Using a touch-tone phone, you can call your phone number from outside and access the unit to listen to messages or change answering system settings. The unit's voice guidance prompts you to press certain dial keys to perform different operations.

Remote access code

A 3-digit remote access code must be entered when operating the answering system remotely. This code prevents unauthorised parties from listening to your messages remotely.

Important:

- In order to operate the answering system remotely, you must first set a remote access code.

1 **[▥]** (right soft key) #306
2 To turn on remote operation, enter the desired 3-digit remote access code.
3 **[OK]** → **[☎]**

Deactivating remote operation

Press * in step 2 on "Remote access code", page 42.
- The entered remote access code is deleted.

Using the answering system remotely

1 Dial your phone number from a touch-tone phone.
2 After the greeting message starts, enter your remote access code.
3 Follow the voice guidance prompts as necessary or control the unit using remote commands (page 43).
4 When finished, hang up.

Voice guidance

During remote operation, the unit's voice guidance starts and prompts you to press 1 to perform a specific operation, or press 2 to listen to more available operations.

Note:

- If you do not press any dial keys within 10 seconds after a voice guidance prompt, the unit disconnects your call.

TGH21x22xBX_UE_ver021.pdf 42 2014/07/31 15:43:48

Remote commands

You can press dial keys to access certain answering system functions without waiting for the voice guidance to prompt you.

Key	Operation
1	Repeat message (during playback)*1
2	Skip message (during playback)
4	Play new messages
5	Play all messages
6	Play greeting message
7	Record greeting message
9	Stop recording Stop playback
0	Turn answering system off
✱ 4	Erase currently playing message
✱ 5	Erase all messages
✱ 6	Reset to a pre-recorded greeting message (during greeting message playback)
✱ #	End remote operation (or hang up)

*1 If pressed within the first 5 seconds of a message, the previous message is played.

Turning on the answering system remotely

1. Dial your phone number from a touch-tone phone.
2. Let the phone ring 15 times.
   - A long beep is heard.
3. Enter your remote access code within 10 seconds after the long beep.
   - The greeting message is played back.
   - You can either hang up, or enter your remote access code again and begin remote operation (page 42).

Answering system settings

Call screening

While a caller is leaving a message, you can listen to the call through the handset's speaker. To adjust the speaker volume, press 【▲】 or 【▼】 repeatedly. You can answer the call by pressing 【📞】 on the handset. Call screening can be set for each handset. The default setting is **"On"**.

1. 【MENU】 (right soft key) # 3 1 0
2. 【▲▼】: Select the desired setting. → 【OK】 → 【⏻】

Number of rings before the unit answers a call

You can change the number of times the phone rings **"Number of Rings"** before the unit answers a call. You can select 2 to 7 rings, or **"Auto"**.
The default setting is **"4 Rings"**.
"Auto": The unit's answering system answers at the end of the 2nd ring when new messages have been recorded, or at the end of the 5th ring when there are no new messages. If you call your phone from outside to listen to new messages (page 42), you know that there are no new messages when the phone rings for the 3rd time. You can then hang up without being charged for the call.

1. 【MENU】 (right soft key) # 2 1 1
2. 【▲▼】: Select the desired setting. → 【OK】 → 【⏻】

For voice mail service subscribers

To receive voice mail and use answering system properly, please note the following:
- To use the voice mail service (page 45) provided by your service provider/telephone company rather than the unit's answering system, turn off the answering system (page 38).
- To use this unit's answering system rather than the voice mail service provided by

TGH21x22xBX_UE_ver021.pdf 43 2014/07/31 15:43:48

your service provider/telephone company, please contact your service provider/ telephone company to deactivate your voice mail service.
If your service provider/telephone company cannot do this:
– Set this unit's **"Number of Rings"** setting so that this unit's answering system answers calls before the voice mail service of your service provider/ telephone company does. It is necessary to check the number of rings required to activate the voice mail service provided by your service provider/telephone company before changing this setting.
– Change the number of rings of the voice mail service so that the answering system can answer the call first. To do so, contact your service provider/ telephone company.

Caller's recording time

You can change the maximum message recording time allowed for each caller. The default setting is **"3 Minutes"**.

1 **【▦】** (right soft key) #305

2 **【▲▼】**: Select the desired setting. → **【OK】** → **【☎】**

Selecting "Greeting Only"

You can select **"Greeting Only"** which sets the unit to announce a greeting message to callers but not record messages.
Select **"Greeting Only"** in step 2 on "Caller's recording time", page 44.

Note:

- When you select **"Greeting Only"**:
  – If you do not record your own message, the unit will play the pre-recorded greeting-only message asking callers to call again later.
  – If you use your own message, record the greeting-only message asking callers to call again later (page 38).

TGH21x22xBX_UE_ver021.pdf 44 2014/07/31 15:43:48

Voice mail service

Voice mail is an automatic answering service offered by your service provider/telephone company. After you subscribe to this service, your service provider/telephone company's voice mail system answers calls for you when you are unavailable to answer the phone or when your line is busy. Messages are recorded by your service provider/telephone company, not your telephone.

When you have new messages, ✉ is displayed on the handset if message indication service is available. Please contact your service provider/telephone company for details of this service.

Important:

- If ✉ still remains on the display even after you have listened to new messages, turn it off by pressing and holding # for 2 seconds.
- To use the voice mail service provided by your service provider/telephone company rather than the unit's answering system, turn off the answering system (page 38). For details, see page 43. (KX-TGH220 series: page 3)

Character entry

The dial keys are used to enter characters and numbers. Each dial key has multiple characters assigned to it. The characters that can be entered depend on the character entry mode (page 45).

– Press **【◄】** or **【►】** to move the cursor left or right.
– Press dial keys to enter characters and numbers.
– Press **【C】** to erase the character or number highlighted by the cursor. Press and hold **【C】** to erase all characters or numbers.
– Press * (A→a) to switch between uppercase and lowercase.
– If you do not press any dial key within 5 seconds after entering a character, the character is fixed and the cursor moves to the next space.
– When entering another character located on the same dial key, operation will differ depending on the display language you select.
English
- Press **【►】** to move the cursor to the next space, then press the appropriate dial key.

Arabic/Persian
- Press **【◄】** to move the cursor to the next space, then press the appropriate dial key.

Character entry modes

The available character entry modes are Alphabet (ABC), Numeric (0-9), Arabic/Persian (ابت) and Extended (AÄÅ). When in these entry modes except Numeric, you can select which character is entered by pressing a dial key repeatedly.

When the unit displays the character entry screen:
【R/ECO】 → **【▲▼】**: Select a character entry mode. → **【OK】**

Note:

- ␣ in the following tables represents a single space.
- When you select Arabic or Persian as the display language, numbers in the character table are displayed in Arabic or Persian.

TGH21x22xBX_UE_ver021.pdf 45 2014/07/31 15:43:48

Useful Information

Alphabet character table (ABC)

0	1	2	3	4	5	6	7	8	9	#
␣ 0	& ' ( ) ∗ , - . / 1	A B C 2	D E F 3	G H I 4	J K L 5	M N O 6	P Q R S 7	T U V 8	W X Y Z 9	#
		a b c 2	d e f 3	g h i 4	j k l 5	m n o 6	p q r s 7	t u v 8	w x y z 9	

Numeric entry table (0-9)

0	1	2	3	4	5	6	7	8	9	#
0	1	2	3	4	5	6	7	8	9	#

Arabic character table (ابت)

- When you select Arabic as the display language, Arabic character table is available.

0	1	2	3	4	5	6	7	8	9	#
␣ ٠	( ) ‘ & . - ، ∗ ١ /	ث ج چ ٢ ح خ	ا پ ة ٣ آ أ ت	ط ظ ع ٤ غ	ش س ٥ ص ض	ذ ر ز ژ ٦	ء ى ي ٧ ئ	م ن ه و ٨ ؤ	ق ف ٩ ك گ ل	#

Persian character table (ابت)

- When you select Persian as the display language, Persian character table is available.

0	1	2	3	4	5	6	7	8	9	#
␣ ٠	( ) ‘ & . - ، ∗ ١ /	ث ج چ ٢ ح خ	ا پ ة ٣ آ أ ت	ط ظ ع ۴ غ	ش س ۵ ص ض	ذ ر ز ژ ء	ء ى ي ٧ ئ	م ن ه و ٨ ؤ	ق ف ٩ ك گ ل	#

Extended character table (AÄÅ)

0	1	2	3	4	5	6	7	8	9	#
␣ 0	& ' ( ) ∗ , - . / 1	A À Á Â Ã Ä Å Æ B C Ç 2	D E È É Ê Ë Ē F 3	G Ğ H I Ì Í Î Ï Ĭ Ì Ĭ 4	J K L 5	M N Ñ O Ò Ó Ô Õ Ö ø 6	P Q R S Ş ß 7	T U Ù Ú Û Ü Ũ V 8	W Ŵ X Y ŷ Z 9	#
		a à á â ã ä å æ b c ç 2	d e è é ê ë ē f 3	g ğ h i ì í î ï ĭ ı ĭ 4	j k l 5	m n ñ o ò ó ô õ ö ø 6	p q r s ş ß 7	t u ù ú û ü ũ v 8	w Ŵ x y ŷ z 9	

- The following are used for both uppercase and lowercase: ø Ŵ ŷ

TGH21x22xBX_UE_ver021.pdf 46 2014/07/31 15:43:48

Error messages

Display message	Cause/solution
Base no power or **No link to base. Reconnect main base AC adaptor.** or **No link.**	• The handset has lost communication with the base unit. Move closer to the base unit and try again. • Unplug the base unit's AC adaptor to reset the unit. Reconnect the adaptor and try again. • The handset's registration may have been cancelled. Re-register the handset (page 34). • When "**No link.**" is displayed during a power failure, place a handset on the base unit to supply power to the base unit.
Check Phone Line	• The supplied telephone line cord has not been connected yet or not connected properly. Check the connections (page 8).
Error	• Recording was too short. Try again.
Memory Full	• The phonebook memory is full. Erase unwanted entries (page 20). • Message memory is full. Erase unwanted messages (page 39, 40). • The call block list memory is full. Erase unwanted entries (page 31).
Use rechargeable battery.	• A wrong type of battery such as Alkaline or Manganese was inserted. Use only the rechargeable Ni-MH batteries noted on page 4, 6.
You must first subscribe to Caller ID.	• You must subscribe to a Caller ID service. Once you receive caller information after subscribing to a Caller ID service, this message will not be displayed.

Troubleshooting

If you still have difficulties after following the instructions in this section, disconnect the base unit's AC adaptor and turn off the handset, then reconnect the base unit's AC adaptor and turn on the handset.

General use

Problem	Cause/solution
The handset does not turn on even after installing charged batteries.	• Place the handset on the base unit or charger to turn on the handset.

TGH21x22xBX_UE_ver021.pdf 47 2014/07/31 15:43:48

Useful Information

Problem	Cause/solution
The unit does not work.	● Make sure the batteries are installed correctly (page 8). ● Fully charge the batteries (page 8). ● Check the connections (page 8). ● Unplug the base unit's AC adaptor to reset the unit and turn off the handset. Reconnect the adaptor, turn on the handset and try again. ● The handset has not been registered to the base unit. Register the handset (page 34).
The handset display is blank or dark.	● The handset is in screen saver mode (page 13). Activate the handset display again by: – pressing 【 】 when on a call. – pressing 【 】 at all other times. ● **"LCD in charging"** is set to **"Off"** while on charge. Change the setting (page 26). ● The handset is not turned on. Turn the power on (page 12).
I cannot hear a dial tone.	● Make sure that you are using the supplied telephone line cord. Your old telephone line cord may have a different wiring configuration. ● The base unit's AC adaptor or telephone line cord is not connected. Check the connections. ● Disconnect the base unit from the telephone line and connect the line to a known working telephone. If the working telephone operates properly, contact our service personnel to have the unit repaired. If the working telephone does not operate properly, contact your service provider/telephone company.
I cannot use the Smart Function Key even if the NR indicator is flashing slowly.	● Another unit is in use. Wait and try again later. ● The key lock feature is turned on. Turn it off (page 17).
The base unit beeps.	● New messages have been recorded. Listen to the new messages (page 39).

Menu list

Problem	Cause/solution
The display is in a language I cannot read.	● Change the display language (page 12).
I cannot activate the eco mode.	● You cannot set eco mode when you set the repeater mode **"On"**. If required, set the repeater mode to **"Off"** (page 35).
I cannot register a handset to a base unit.	● The maximum number of handsets (6) is already registered to the base unit. Cancel unused handset registrations from the base unit (page 34). ● You entered the wrong PIN. If you forget your PIN, contact an authorised service centre.

TGH21x22xBX_UE_ver021.pdf 48 2014/07/31 15:43:48

Battery recharge

Problem	Cause/solution
The handset beeps and/or flashes.	• Battery charge is low. Fully charge the batteries (page 8).
I fully charged the batteries, but – still flashes or – the operating time seems to be shorter.	• Clean the battery ends (⊕, ⊖) and the charge contacts with a dry cloth and charge again. • It is time to replace the batteries (page 8).

Making/answering calls, intercom

Problem	Cause/solution
is displayed.	• The handset is too far from the base unit. Move closer. • The base unit's AC adaptor is not properly connected. Reconnect AC adaptor to the base unit. • The handset is not registered to the base unit. Register it (page 34). • Activating eco mode reduces the range of the base unit in standby mode. If required, turn eco mode off (page 13).
Noise is heard, sound cuts in and out.	• You are using the handset or base unit in an area with high electrical interference. Re-position the base unit and use the handset away from sources of interference. • Move closer to the base unit. • If you use a DSL/ADSL service, we recommend connecting a DSL/ADSL filter between the base unit and the telephone line jack. Contact your DSL/ADSL provider for details.
Sound quality seems to be getting worse.	• You have registered a handset that is not recommended (page 4). The clearest sound quality is only possible by registering the recommended handset.
The handset does not ring.	• The ringer volume is turned off. Adjust ringer volume (page 15, 25). • Do not disturb mode is turned on. Turn it off (page 29).
The base unit does not ring.	• The ringer volume is turned off. Adjust ringer volume (page 15, 25).
I cannot make a call.	• The dialling mode may be set incorrectly. Change the setting (page 14). • You dialled a call restricted number (page 33). • The key lock feature is turned on. Turn it off (page 17).

TGH21x22xBX_UE_ver021.pdf 49 2014/07/31 15:43:48

Caller ID

Problem	Cause/solution
Caller information is not displayed.	● You must subscribe to a Caller ID service. Contact your service provider/telephone company for details. ● If your unit is connected to any additional telephone equipment, remove and plug the unit directly into the wall jack. ● If you use a DSL/ADSL service, we recommend connecting a DSL/ADSL filter between the base unit and the telephone line jack. Contact your DSL/ADSL provider for details. ● Other telephone equipment may be interfering with this unit. Disconnect the other equipment and try again.
Caller information is slow to display.	● Depending on your service provider/telephone company, the unit may display the caller's information at the 2nd ring or later. Set the first ring to **"Off"** (page 25). ● Move closer to the base unit.
Time on the unit has shifted.	● Incorrect time information from incoming Caller ID changes the time. Set the time adjustment to **"Manual"** (off) (page 25).

Answering system

Problem	Cause/solution
The unit does not record new messages.	● The answering system is turned off. Turn it on (page 38). ● The message memory is full. Erase unwanted messages (page 39). ● The recording time is set to **"Greeting Only"**. Change the setting (page 44). ● Your service provider/telephone company's voice mail service may be answering your calls before the unit's answering system can answer your calls. Change the unit's number of rings setting (page 43) to a lower value, or contact your service provider/telephone company.
I cannot operate the answering system remotely.	● The remote access code is not set. Set the remote access code (page 42). ● You are entering the wrong remote access code. If you have forgotten your remote access code, enter the remote access code setting to check your current code (page 42). ● The answering system is turned off. Turn it on (page 43).
The unit does not emit the specified number of rings.	● If the first ring is turned off, the number of rings decreases by 1 from the specified number of rings.

TGH21x22xBX_UE_ver021.pdf 50 2014/07/31 15:43:48

Liquid damage

Problem	Cause/solution
Liquid or other form of moisture has entered the handset/base unit.	● Disconnect the AC adaptor and telephone line cord from the base unit. Remove the batteries from the handset and leave to dry for at least 3 days. After the handset/base unit are completely dry, reconnect the AC adaptor and telephone line cord. Insert the batteries and charge fully before use. If the unit does not work properly, contact an authorised service centre.

Caution:

- To avoid permanent damage, do not use a microwave oven to speed up the drying process.

TGH21x22xBX_UE_ver021.pdf 51 2014/07/31 15:43:48

Index

A Additional handsets: *34*
Alarm: *29*
Answering calls: *15*
Answering system: *38*
Call screening: *43*
Erasing messages: *39*, *40*, *43*
Greeting message: *38*
Greeting only: *44*
Listening to messages: *39*, *42*
Message list: *40*
New message alerting: *41*
Number of rings: *43*
Recording time: *44*
Remote access code: *42*
Remote operation: *42*
Turning on/off: *38*
Area code: *33*
Auto intercom: *17*
Auto talk: *15*, *27*

B Baby monitor: *31*
Battery: *8*, *9*

C Call restriction: *33*
Call share: *16*
Call waiting: *16*
Call Waiting Caller ID: *16*
Caller ID service: *36*
Caller list: *36*
Caller list edit: *37*
Category: *19*
Chain dial: *20*
Character entry: *45*
Conference calls: *17*
Control type: *10*

D Date and time: *12*
Dialling mode: *14*
Direct command code: *22*
Display
Clock: *26*
Colour: *26*
Display mode: *26*
Language: *12*
LCD backlight: *26*
Wallpaper: *26*
Do not disturb mode: *29*

E Eco mode: *13*
Equalizer: *16*
Error messages: *47*

F First ring: *25*

H Handset
Deregistration: *34*
Locator: *10*
Name: *33*
Registration: *34*
Hold: *16*

I Intercom: *17*

K Key finder: *23*, *26*
Key lock: *17*
Keytones: *27*

M Making calls: *15*
Missed calls: *36*
Mute: *16*

N Noise reduction: *16*
Nuisance call block: *30*

P Pause: *15*
Phonebook: *19*
PIN: *34*
Power failure (power back-up operation): *18*
Power on/off: *12*
Privacy mode: *27*

R Recall/flash: *16*
Redialling: *15*
Repeater: *35*
Ringer tone: *25*

S Security for phone calls: *34*
Smart Function Key (NR key): *12*
Speakerphone: *15*
Speed dial: *20*

T Temporary tone dialling: *16*
Time adjustment: *25*
Transferring calls: *17*
Troubleshooting: *47*

V Voice mail: *45*
Volume
Receiver: *15*
Ringer (Base unit): *15*, *25*
Ringer (Handset): *15*, *25*
Speaker: *15*

TGH21x22xBX_UE_ver021.pdf 52 2014/07/31 15:43:48

TGH21x22xBX_UE_ver021.pdf 53 2014/07/31 15:43:48

Notes

TGH21x22xBX_UE_ver021.pdf 54 2014/07/31 15:43:48

TGH21x22xBX_UE_ver021.pdf 55 2014/07/31 15:43:49

For your future reference
We recommend keeping a record of the following information to assist with any repair under warranty.

Serial No.	Date of purchase
(found on the bottom of the base unit)	
Name and address of dealer	

Attach your purchase receipt here.

Panasonic System Networks Co., Ltd.
1-62, 4-chome, Minoshima, Hakata-ku, Fukuoka 812-8531, Japan
Web Site: http://www.panasonic.net/

© Panasonic System Networks Co., Ltd. 2014

PNQX6417ZA

PNQX6417ZA TT0814YK0